VACUUM SOLUTIONS

Part of the BUSCH GROUP

MINK

Claw Vacuum Pumps
MM 0084 A, MM 0104 A, MM 0142 A, MM 0182 A

Instruction Manual

SERVICE AND SPARE PARTS, INSTRUCTION MANUALS ... WWW.BUSCHVACUUM.COM/SERVICE-CONTACT

VACUUM APP

0870231667 | C0_en-US | Original instructions

2026/09/28

Table of Contents

1 Safety ... 3

2 Product Description ... 4

2.1 Operating Principle ... 5

2.2 Intended Use ... 5

2.3 Design Options ... 6

2.3.1 Aqua Version ... 6

2.3.2 PLASTEX Version ... 6

2.4 Start Controls ... 7

2.5 Optional Accessories ... 7

2.5.1 Inlet Filter ... 7

2.5.2 Vacuum Relief Valve ... 7

2.5.3 Condensate Drain ... 7

2.5.4 Resistance Thermometer (Exhaust Gas) ... 7

2.5.5 Temperature Switch "Gas" ... 7

2.5.6 OTTO IoT Box ... 7

3 Transport and Handling ... 8

4 Storage ... 8

5 Installation ... 9

5.1 Installation Conditions ... 9

5.2 Connecting Lines / Pipes ... 10

5.2.1 Inlet Connection ... 11

5.2.2 Exhaust Connection ... 11

5.3 Filling Oil ... 12

6 Electrical Connection ... 13

6.1 Machine delivered without Control Box or Variable Speed Drive (VSD) ... 14

6.2 Wiring Diagram Three-Phase Motor ... 14

6.3 Electrical Connection of the Monitoring Devices ... 16

6.3.1 Wiring Diagram Temperature Switch "Gas" ... 16

6.3.2 Wiring Diagram Resistance Thermometer ... 16

7 Commissioning ... 17

7.1 Conveying Condensable Vapors ... 18

8 Maintenance ... 19

8.1 Maintenance Schedule ... 20

8.2 Oil Level Inspection ... 21

8.3 Cleaning from Dust and Dirt ... 21

8.4 Oil Change ... 22

9 Overhaul ... 25

10 Decommissioning ... 25

10.1 Dismantling and Disposal ... 26

11 Spare Parts ... 26

12 Troubleshooting ... 27

13 Technical Data ... 29

14 Oil ... 30

15 EU Declaration of Conformity ... 31

16 UK Declaration of Conformity ... 32

1 Safety

Prior to handling the machine, this instruction manual should be read and understood. If anything needs to be clarified, contact your manufacturer representative.

Read this instruction manual carefully before use and keep for future reference.

This instruction manual remains valid as long as the customer does not change anything on the product.

The machine is intended for industrial use. It must be handled only by technically trained personnel.

Always wear appropriate personal protective equipment in accordance with the local regulations.

The machine has been designed and manufactured in accordance with the state-of-the-art methods. Nevertheless, residual risks may remain, as described in the following chapters and in accordance with the chapter *Intended Use* [➔ 5].

This instruction manual highlights potential hazards where appropriate. Safety notes and warning messages are tagged with one of the keywords DANGER, WARNING, CAUTION, NOTICE and NOTE as follows:

DANGER

... indicates an imminent dangerous situation that will result in death or serious injuries if not prevented.

WARNING

... indicates a potentially dangerous situation that could result in death or serious injuries.

CAUTION

... indicates a potentially dangerous situation that could result in minor injuries.

NOTICE

... indicates a potentially dangerous situation that could result in damage to property.

NOTE

... indicates helpful tips and recommendations, as well as information for efficient and trouble-free operation.

2 Product Description

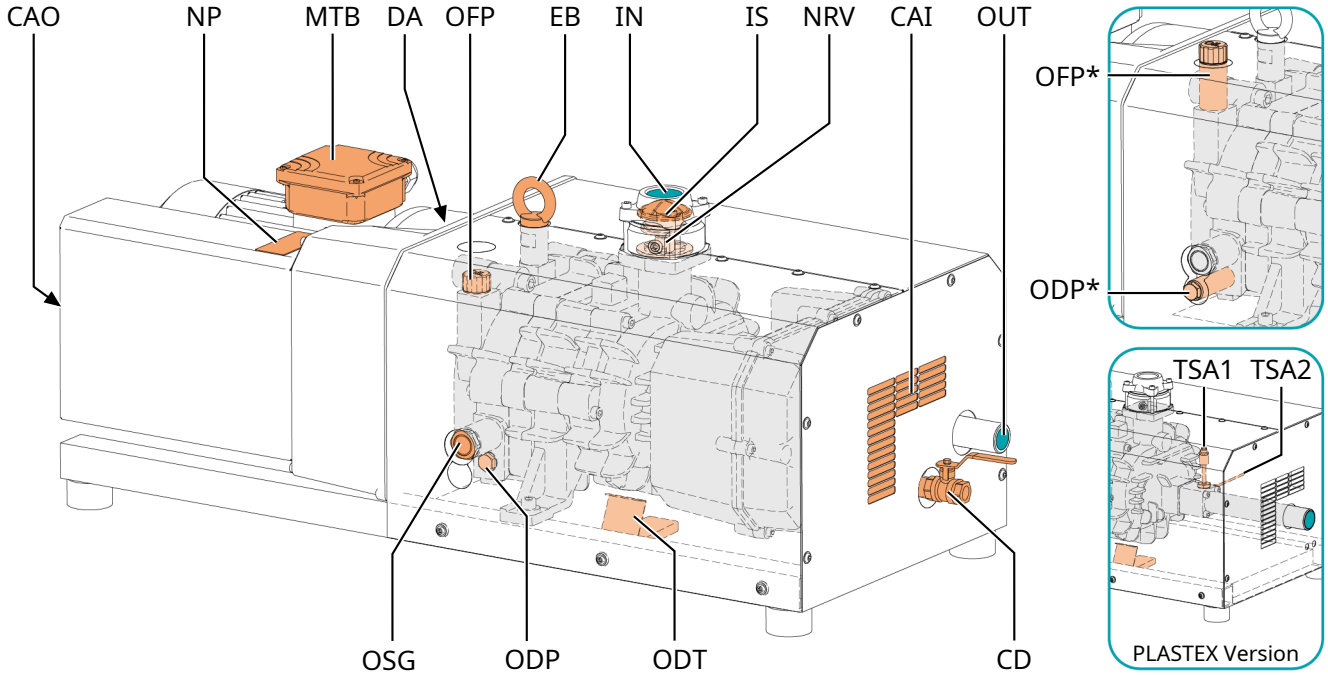

Description			
IN	Inlet connection	OUT	Exhaust connection
OFP	Oil fill plug/venting valve (below the cover)	ODP	Oil drain plug (below the cover)
OFP* (optional)	Extended oil fill plug/venting valve	ODP* (optional)	Extended ol drain plug
CAI	Cooling air inlet	CAO	Cooling air outlet
OSG	Oil sight glass	EB	Eye bolt
NRV	Non-return valve (integrated)	IS	Inlet screen
MTB	Motor terminal box	DA	Directional arrow
ODT	Oil drain tool (below the cover)	CD (optional)	Condensate drain (aqua version)
TSA1 (optional)	Resistance thermometer (PLASTEX version without internal silencer)	TSA2 (optional)	Temperature transmitter (PLASTEX version without internal silencer)
NP	Nameplate		

NOTE

Technical term.

In this instruction manual, we consider that the term 'machine' refers to the 'vacuum pump'.

NOTE

Illustrations.

In this instruction manual, the illustrations may differ from the appearance of the machine.

NOTE

Product origin.

The serial number on the name plate (NP) determines the manufacturing plant.

2.1 Operating Principle

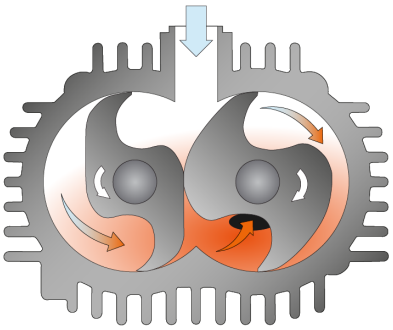

The machine works on the claw principle.

The MINK is fully air-cooled thanks to an integrated fan in the drive unit.

In order to avoid solids from entering, the machine is equipped with an inlet screen (IS).

Inlet screen (IS):

- See *Cleaning from Dust and Dirt* [➔ 21]
- See *Troubleshooting* [➔ 27]

In order to avoid reverse rotation after switching off, the machine is equipped with a non-return valve (NRV).

2.2 Intended Use

WARNING

In case of foreseeable misuse outside the intended use of the machine.

Risk of injuries!

Risk of damage to the machine!

Risk of damage to the environment!

- Make sure to follow all instructions described in this manual.
- Make sure to operate the machine only when all provided covers, guards, hoods, etc. are mounted.
- Entanglement prevention: Do not wear loose clothing and long hair must be tied back securely before operating the machine.

The machine is intended for the suction of air and other dry, non-aggressive, non-toxic, non-ignitable and non-explosive gases.

Conveying of other media leads to an increased thermal and/or mechanical load on the machine and is permissible only after a consultation with the manufacturer.

The machine is intended for placement in a potentially non-explosive environment.

The machine is designed for indoor installations. For outdoor installations, consult your Busch representative for special precautions.

The machine is capable of maintaining ultimate pressure, see *Technical Data* [➔ 29].

The machine is suitable for continuous operation.

Note: The non-return valve (NRV) shouldn't be used as a non-return valve or isolation valve for the system. The non-return valve is only to protect the machine.

If the machine needs to be maintained after shutdown:

- Provide an additional manual or automatic operated non-return valve in the suction line.

Permitted environmental conditions, see *Technical Data* [➔ 29].

2.3 Design Options

The design options described in the following chapters might be combined.

Please refer to the nameplate (NP) to identify the corresponding design option of your machine.

Design option	Codification	Example
Standard (no design option)	0	MM 0182 A 0**0**
Aqua version	A	MM 0182 A 0**A**
PLASTEX version	Z	MM 0182 A 0**Z**

2.3.1 Aqua Version

The Aqua version is a design option for conveying condensable vapors (water).

This machine is specifically equipped with:

- corrosion protection coating.
- optional condensate drain (CD) in the internal silencer.

2.3.2 PLASTEX Version

CAUTION

Hot surface.

Risk of burns!

- Before doing anything that requires touching the exhaust connection (OUT), let it cool down first.

CAUTION

Noise of running the machine without internal silencer.

Risk of damage to hearing!

If people are present in the vicinity of a machine that is not insulated from noise for extended periods of time:

- Make sure to wear hearing protection.

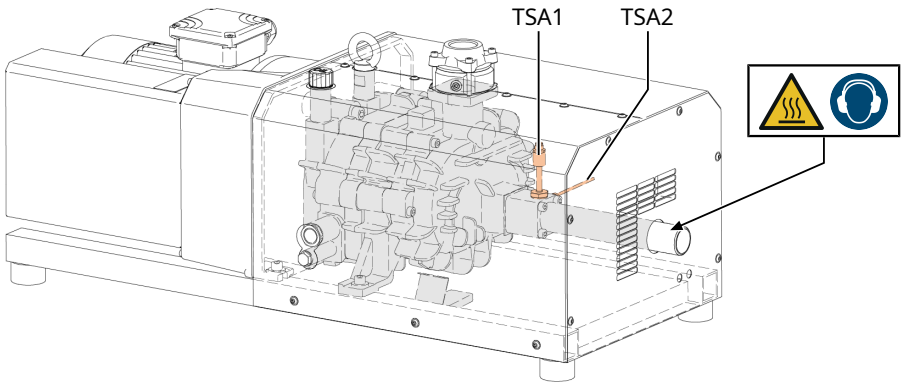

PLASTEX Version

Description			
TSA1 (optional)	Resistance thermometer (PLASTEX version without internal silencer)	TSA2 (optional)	Temperature transmitter (PLASTEX version without internal silencer)

This MINK version is integrated into the PLASTEX system. This version is not equipped with a silencer which causes higher sound pressure levels during operation and higher temperatures at the machine outlet.

Make sure to not exceed the permitted ultimate pressure, see *Technical Data* [➔ 29].

The PLASTEX version is equipped with temperature monitoring devices directly after the pumping stage, see *Resistance Thermometer (Exhaust Gas)* [➔ 7] and *Temperature Switch "Gas"* [➔ 7].

2.4 Start Controls

The machine comes without start controls. The control of the machine is to be provided in the course of installation.

The machine can be equipped with a soft-starter.

2.5 Optional Accessories

2.5.1 Inlet Filter

The inlet filter protects the machine against dust and other solids in the process gas. The inlet filter is available with a paper or polyester cartridge.

2.5.2 Vacuum Relief Valve

The ultimate pressure is limited by a vacuum relief valve (VRE). The vacuum relief valve is adjusted ex-works to the minimum permitted ultimate pressure shown on the nameplate (NP).

2.5.3 Condensate Drain

The condensate drain (CD) is used to drain the accumulated fluids.

2.5.4 Resistance Thermometer (Exhaust Gas)

NOTE

This temperature monitoring device must be electrically connected.

- For more information, see *Electrical Connection of the Monitoring Devices* [➔ 16].

The resistance thermometer (TSA1) monitors the exhaust gas temperature directly after the pumping stage of the machine.

2.5.5 Temperature Switch "Gas"

NOTE

This temperature monitoring device must be electrically connected.

- For more information, see *Electrical Connection of the Monitoring Devices* [➔ 16].

The temperature switch (TSA2) monitors the exhaust gas temperature of the machine. It protects the machine from overheating by cut off the power supply once the trip value is exceeded.

The temperature switch “Gas” monitors the gas temperature of the machine.

2.5.6 OTTO IoT Box

The machine can be equipped with the OTTO IoT Box.

It allows the vacuum pump to be connected to the Busch Cloud and collect live measured data during its operation.

For the activation and setup of this optional function, contact your Busch representative.

For any additional information, refer to the specific document “OTTO IoT Box User's Manual, art. no. 0870236702” or contact your Busch representative.

3 Transport and Handling

WARNING

Suspended load.

Risk of severe injury!

- Do not walk, stand, or work under suspended loads.

WARNING

Lifting the machine using the motor eye bolt.

Risk of severe injury!

- Do not lift the machine using the eye bolt fitted to the motor.
- Only lift the machine as shown.

- To find out the weight of the machine, refer to the chapter *Technical Data* [➔ 29] or the name plate (NP).

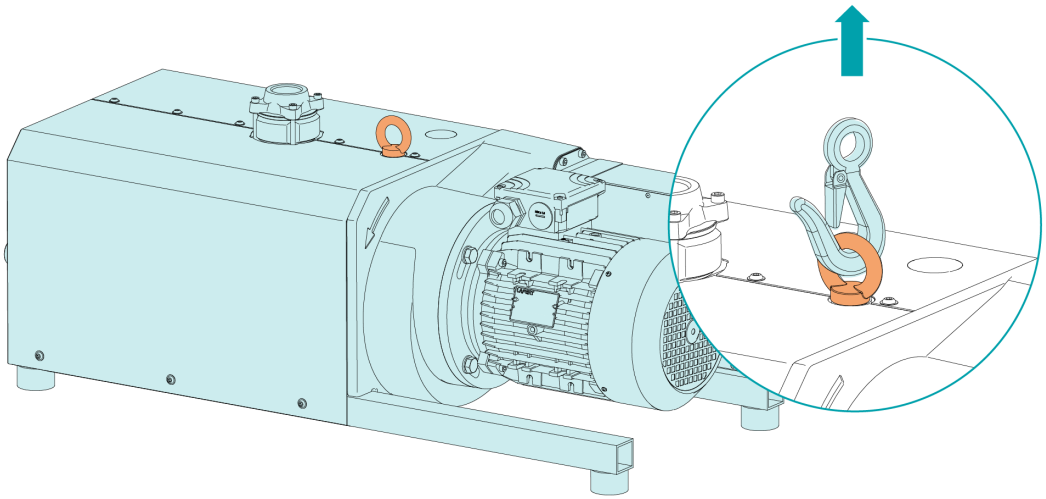

- Check that the machine has not been damaged during transport.

If the machine is mounted and secured on a transport support (pallet):

- Remove the machine from the transport support before installation.

4 Storage

- Seal hermetically all apertures with the caps provided with the machine, or with adhesive tape if the caps are no longer available.
- Store the machine indoors, in a dry place, away from dust and vibrations and if possible, in original packaging, preferably at temperatures between 0 ... 40 °C.

If the machine is to be stored for more than 3 months:

- Seal hermetically all apertures with the caps provided with the machine, or with adhesive tape if the caps are no longer available.
- Wrap the machine in a corrosion inhibitor film.
- Store the machine indoors, in a dry place, away from dust and vibrations and if possible, in original packaging, preferably at temperatures between 0 ... 40 °C.

5 Installation

5.1 Installation Conditions

NOTICE

Use of the machine outside of the permitted installation conditions.

Risk of premature failure!

Loss of efficiency!

- Make sure that the installation conditions are fully respected.

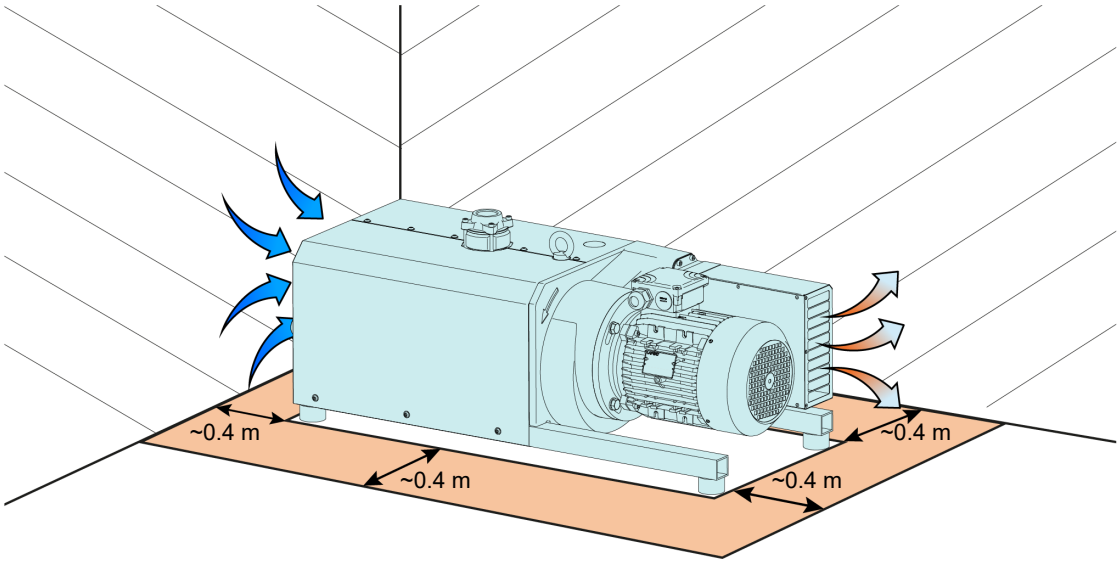

- Make sure that the environment of the machine is not potentially explosive.
- Make sure that the ambient conditions comply with the *Technical Data* [➔ 29].
- Make sure that the environmental conditions comply with the protection class of the motor and the electrical elements.
- Make sure that the installation space or location is protected from weather and lightning.
- Make sure that the installation space or location is vented such that sufficient cooling of the machine is provided.
- Make sure that cooling air inlets (CAI) and outlets (CAO) are not covered or obstructed and that the cooling air flow is not affected adversely in any other way.
- Make sure that the oil sight glass (OSG) remains easily visible.
- Make sure that enough space remains for maintenance work.
- Make sure that the machine is placed or mounted horizontally, a maximum deviation of 1° in any direction is acceptable.
- Check the oil level, see *Oil Level Inspection* [➔ 21].
- Make sure that all provided covers, guards, hoods, etc. are mounted.

If the machine is installed at an altitude greater than 1000 meters above sea level:

- Contact your manufacturer representative, the motor must be derated or the ambient temperature limited.

5.2 Connecting Lines / Pipes

WARNING

Rotating Parts.

Risk of severe injury!

- Do not operate the machine without inlet and outlet connections installed.

- Remove all protective covers before installation.
- Make sure that the connecting lines cause no stress on the connections of the machine. Therefore, we recommend installing flexible lines at the inlet and exhaust connections.
- Make sure that the diameter of the connecting lines over the entire length is at least as large as the connections of the machine.
- Make sure that there is no counter pressure (also called “back pressure”) at the exhaust connection (OUT).

In case of long connecting lines:

- Use larger diameters to avoid a loss of efficiency.
- Contact your manufacturer representative for more information.

NOTICE

Potential condensate flows from the piping to the machine.

Risk of damage to the machine!

- Make sure that the inlet and outlet connecting pipes of the machine are installed in such a way as to prevent any possible condensate from flowing from the piping into the machine.
- Busch recommends the use of the optional horizontal inlet filter and exhaust condensate drain (or drip leg), to collect condensate and prevent it from flowing into the machine.

5.2.1 Inlet Connection

NOTICE

Ingress of foreign objects or liquids.

Risk of damage to the machine!

If the inlet gas contains dust or other foreign solid particles:

- Install a suitable filter (5 micron or less) at the inlet of the machine.

Connection size(s):

– G1 ¼”

Depending on the specific configuration ordered, other connection dimensions may apply.

- Make sure that the connecting lines cause no stress on the connections of the machine. Therefore, we recommend installing flexible lines at the inlet and exhaust connections.

5.2.2 Exhaust Connection

NOTICE

Exhaust gas flow obstructed.

Risk of damage to the machine!

- Make sure that the exhaust gas will flow without obstruction. Do not shut off or throttle the exhaust line or use it as a pressurized air source.

Connection size(s):

– R1”

Depending on the specific configuration ordered, other connection dimensions may apply.

Unless the air drawn in is directly released into the environment right at the machine:

  - Make sure that the exhaust line slopes away from the machine. In the opposite case, provide a liquid separator or a siphon with a drain cock, to prevent liquids from flowing back into the machine.

- Make sure that the connecting lines cause no stress on the connections of the machine. Therefore, we recommend installing flexible lines at the inlet and exhaust connections.

5.3 Filling Oil

NOTICE

Use of inappropriate oil.

Risk of premature failure!

Loss of efficiency!

- Use only a type of oil previously approved and recommended by the manufacturer.

- For information on oil type and filling capacities, see the *Technical Data* [➔ 29] and *Oil* [➔ 30] chapters.

Standard Oil Fill Plug

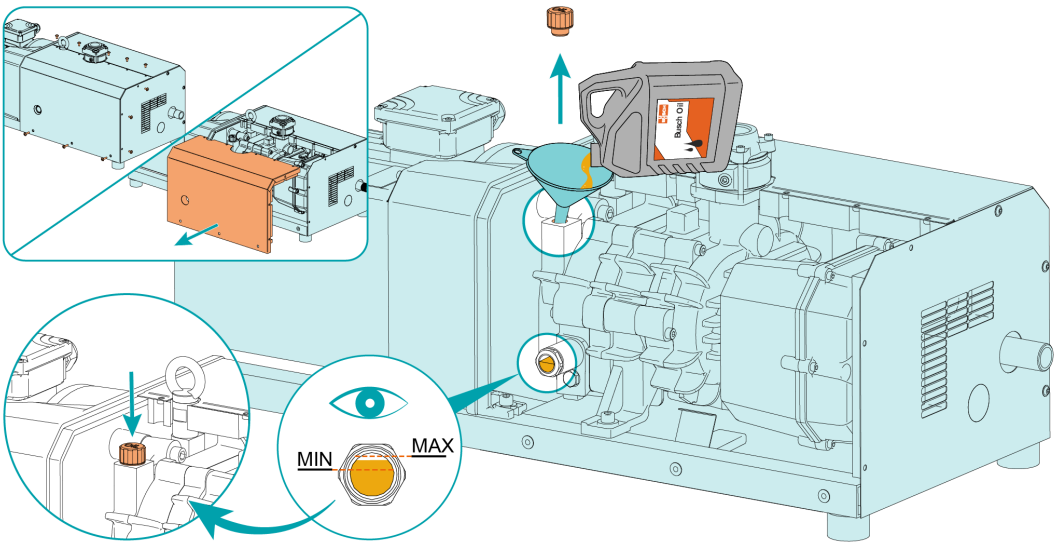

Extended Oil Fill Plug (optional)

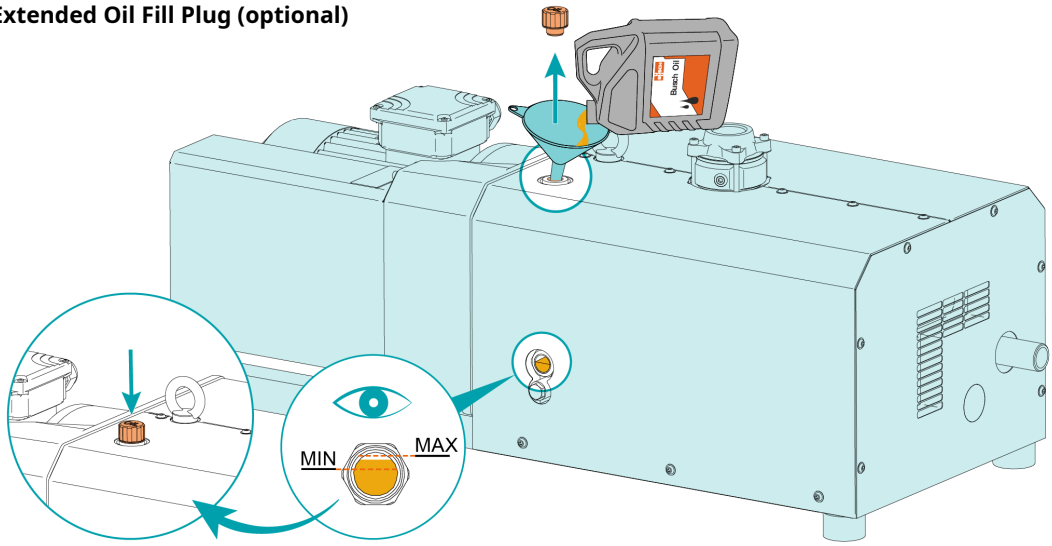

The oil level should stay constant over the lifetime of the oil. If the level does fall, this indicates a leak and the machine requires repair.

6 Electrical Connection

DANGER

Live wires.

Risk of electrical shock!

- Electrical installation work must only be executed by qualified personnel.

INSTALLATION(S) CURRENT PROTECTION:

DANGER

Missing current protection.

Risk of electrical shock!

- Provide current protection in accordance with EN 60204-1 on your installation(s).
- The electrical installation must comply with the applicable national and international standards.

NOTICE

Electromagnetic compatibility.

- Make sure that the motor of the machine will not be affected by electric or electromagnetic disturbance from the mains. If necessary, contact your Busch representative for more information.
- Make sure that the EMC of the machine is compliant with the requirements of your supply network system, if necessary, provide further interference suppression (EMC of the machine, see *EU Declaration of Conformity* [➔ 31] or *UK Declaration of Conformity* [➔ 32]).

6.1 Machine delivered without Control Box or Variable Speed Drive (VSD)

DANGER

Live wires.

Risk of electrical shock!

- Electrical installation work must only be executed by qualified personnel.

- Make sure that the power supply for the motor is compatible with the data on the name plate of the motor.
- If the machine is equipped with a power connector, install a residual current protective device to protect persons in case of a defective insulation.
  - Busch recommends installing a type B residual protective device suitable for the electrical installation.
- Provide a lockable disconnect switch or an emergency stop switch on the power line so that the machine is completely secured in case of an emergency situation.
- Provide a lockable disconnect switch on the power line so that the machine is completely secured during maintenance tasks.
- Provide an overload protection according to EN 60204-1 for the motor.
  - Busch recommends installing a D-curve circuit breaker.
- Connect the protective earth conductor.
- Electrically connect the motor.

NOTICE

Incorrect connection.

Risk of damage to the motor!

- The wiring diagrams below are examples only. See inside the terminal box for motor connection instructions and diagrams.

6.2 Wiring Diagram Three-Phase Motor

NOTICE

Incorrect rotation direction.

Risk of damage to the machine!

- Operating the machine in the wrong direction of rotation can destroy it very quickly!
  Before starting, make sure that the motor of the machine is rotating in the correct direction.

- Determine the intended direction of rotation with the arrow (stuck on or cast).
- Jog the motor briefly.

If the rotation of the motor must be changed:

  - Switch any two of the motor phase wires.

Delta connection (low voltage):

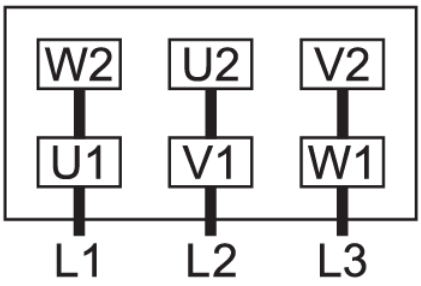

Star connection (high voltage):

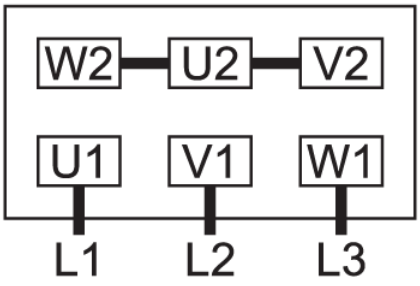

Double star connection, multi-voltage motor with 9 pins (low voltage):

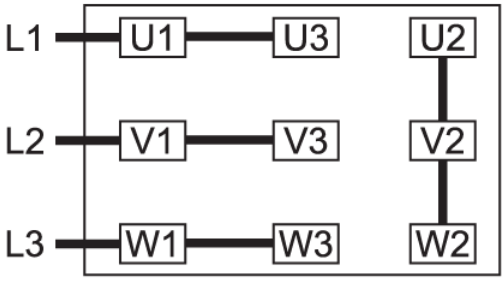

Star connection, multi-voltage motor with 9 pins (high voltage):

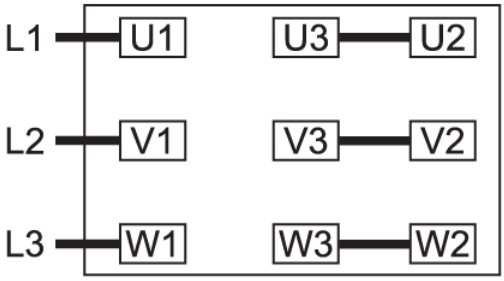

6.3 Electrical Connection of the Monitoring Devices

NOTE

To prevent potential nuisance alarms, Busch recommends that the control system is configured with a time delay of at least 20 seconds.

6.3.1 Wiring Diagram Temperature Switch "Gas"

Article number: 0651 566 632

Connector: M12x1, 4-pin

Electrical data: U = ≤ 250 V AC/DC (50/60 Hz); I = ≤ 1 A

Switch point: T_1 pin 1 + 2 = 110 °C

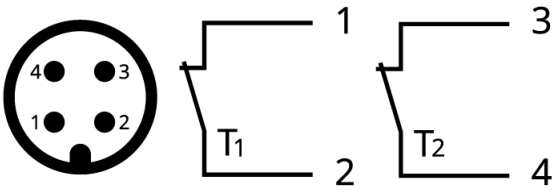

1 = Brown; 2 = White; 3 = Blue; 4 = Black

6.3.2 Wiring Diagram Resistance Thermometer

Temperature Control Switch (TCS)

Part no.: 2000 199 712

Operating voltage: 18 ... 32 V DC

Current consumption: < 50 mA

Communication interface: IO-Link

Output signal: 2

Electrical Design: PNP/NPN

Measuring range: -100 ... 600 °C

Connection size: G ½

Connector: 1 x M12; coding: A; Contacts: gold-plated

Protection: IP 67

Ex-work trip signal: T_{trip}: 115 °C

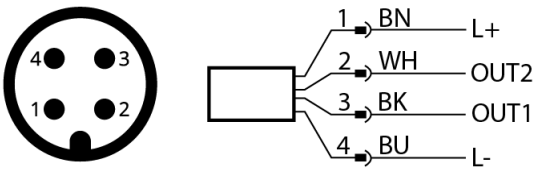

1 = Brown; 2 = White; 3 = Blue; 4 = Black

7 Commissioning

NOTICE

Lubricating a dry running machine (compression chamber).

Risk of damage to the machine!

- Do not lubricate the compression chamber of the machine with oil or grease.

CAUTION

In operation, the surface of the machine may reach temperatures over 70°C.

Risk of burns!

- Avoid contact with the machine during and directly after operation.

CAUTION

While operating and/or venting the machine, the discharged gases and/or liquids may reach temperatures above 70°C.

Risk of burns!

- Avoid direct contact with the outlet connection (OUT) and installed lines or pipes.
- Avoid direct contact with the gas and/or liquid stream, in case the gas discharge (OUT) has no connections (lines or pipes) installed.

- Make sure that the *Installation Conditions* [➔ 9] are met.
- Start the machine.
- Make sure that the maximum permissible number of starts does not exceed 12 starts per hour. Those starts should be spread within the hour.
- Make sure that the operating conditions comply with the *Technical Data* [➔ 29].

As soon as the machine is used under normal operating conditions:

- Measure the motor current and record it as reference for future maintenance and trouble-shooting work.

7.1 Conveying Condensable Vapors

CAUTION

In operation, the surface of the inlet and exhaust connections may reach temperatures over 70°C.

Risk of burns!

- Avoid contact with these surfaces during and directly after operation.

CAUTION

Draining the condensate while operating.

The discharged gases and/or liquids may reach temperatures above 70°C!

Risk of burns!

- Avoid direct contact with the flow of gases and/or liquids.

CAUTION

Venting the machine.

The discharged gases and/or liquids may reach temperatures above 70°C!

Risk of burns!

- Avoid direct contact with the flow of gases and/or liquids.

CAUTION

Noise while draining the condensate.

Risk of damage to hearing!

While the machine is running, opening the condensate drain valve will lead to a significant increase of the noise level.

- Make sure to wear hearing protection.

The Aqua version is a design option for conveying condensable vapors (water).

Water vapor within the gas flow is tolerated within certain limits. The conveyance of other vapors shall be agreed upon with the manufacturer.

If condensable vapors are to be conveyed:

Before process:

- Warm up the machine for approximately half an hour.

After process:

- Run the machine for about another half hour.

- Regularly drain condensate from the silencer with the drain cock.

8 Maintenance

DANGER

Live wires.

Risk of electrical shock!

- Electrical installation work must only be executed by qualified personnel.

WARNING

The machine is contaminated with hazardous material.

Risk of poisoning!

Risk of infection!

If the machine is contaminated with hazardous material:

- Wear appropriate personal protective equipment.

CAUTION

Hot surface.

Risk of burns!

- Before doing anything that requires touching the machine, let it cool down first.

CAUTION

Hot liquids.

Risk of burns!

- Before draining liquids, let the machine cool down first.

CAUTION

Draining the condensate while operating.

The discharged gases and/or liquids may reach temperatures above 70°C!

Risk of burns!

- Avoid direct contact with the flow of gases and/or liquids.

CAUTION

Venting the machine.

The discharged gases and/or liquids may reach temperatures above 70°C!

Risk of burns!

- Avoid direct contact with the flow of gases and/or liquids.

CAUTION

Failing to properly maintain the machine.

Risk of injuries!

Risk of premature failure and loss of efficiency!

- Maintenance work must only be executed by qualified personnel.
- Respect the maintenance intervals or ask your Busch representative for service.

NOTICE

Using inappropriate cleaners.

Risk of removing safety stickers and protective paint!

- Do not use incompatible solvents to clean the machine.

- Stop the machine and lock it to prevent accidental start-up.
- Vent the connected lines to atmospheric pressure.

If necessary:

- Disconnect all connections.

8.1 Maintenance Schedule

The maintenance intervals depend very much on the individual operating conditions. The intervals given below are considered as starting values which should be individually shortened or extended as appropriate.

Particularly harsh applications or heavy-duty operation, such as high dust loads in the environment or in the process gas, other contamination or ingress of process material, can make it necessary to shorten the maintenance intervals significantly.

Interval	Maintenance work
Monthly	• Check the inlet screen (IS), clean if necessary. In case of an inlet filter (IF) being installed: • Check the inlet filter cartridge, replace if necessary.
Every 3 months	• Check the oil level, see *Oil Level Inspection* [➔ 21].
Every 6 months	• Clean the machine from dust and dirt. In case of a coupling (CPL) being installed: • Check the coupling (CPL) for backlash and wear.
Every 20000 hours	• Change the oil. The change interval of 20000 operating hours is valid for Busch approved oils only. The change interval depends very much on the operating conditions. Borderline operation may reduce the change interval down to approximately 5000 operating hours. Other oils may reduce the change interval.
Every 40000 hours or after 6 years	• Have a major overhaul on the machine (contact Busch).

8.2 Oil Level Inspection

- Stop the machine.
- Wait 1 minute.
- Check the oil level.

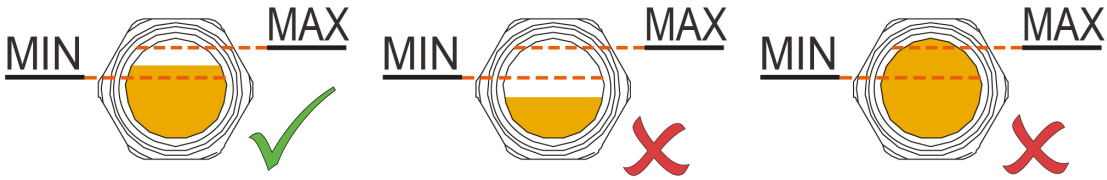

The oil level should stay constant over the lifetime of the oil. If the level does fall, this indicates a leak and the machine requires repair.

- Fill up if necessary, see *Filling Oil* [➔ 12].

8.3 Cleaning from Dust and Dirt

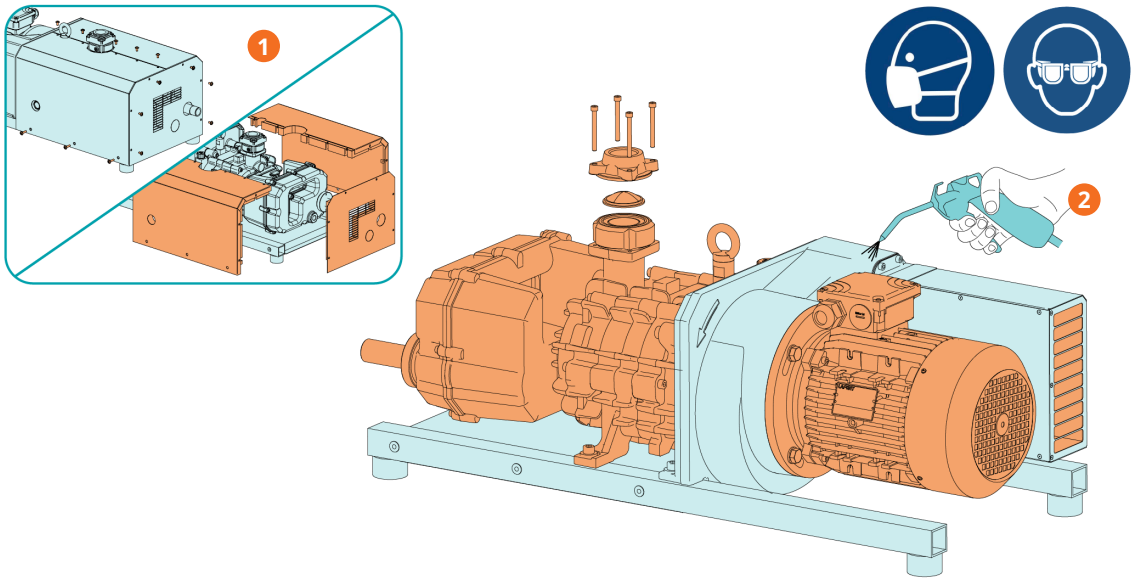

Description			
1	Remove all screws and covers first	2	Clean thel ventilation grid, fans, inlet screen and cooling fins

8.4 Oil Change

NOTICE

Use of inappropriate oil.

Risk of premature failure!

Loss of efficiency!

- Use only a type of oil previously approved and recommended by the manufacturer.

Oil drain tool: Storage and Installation

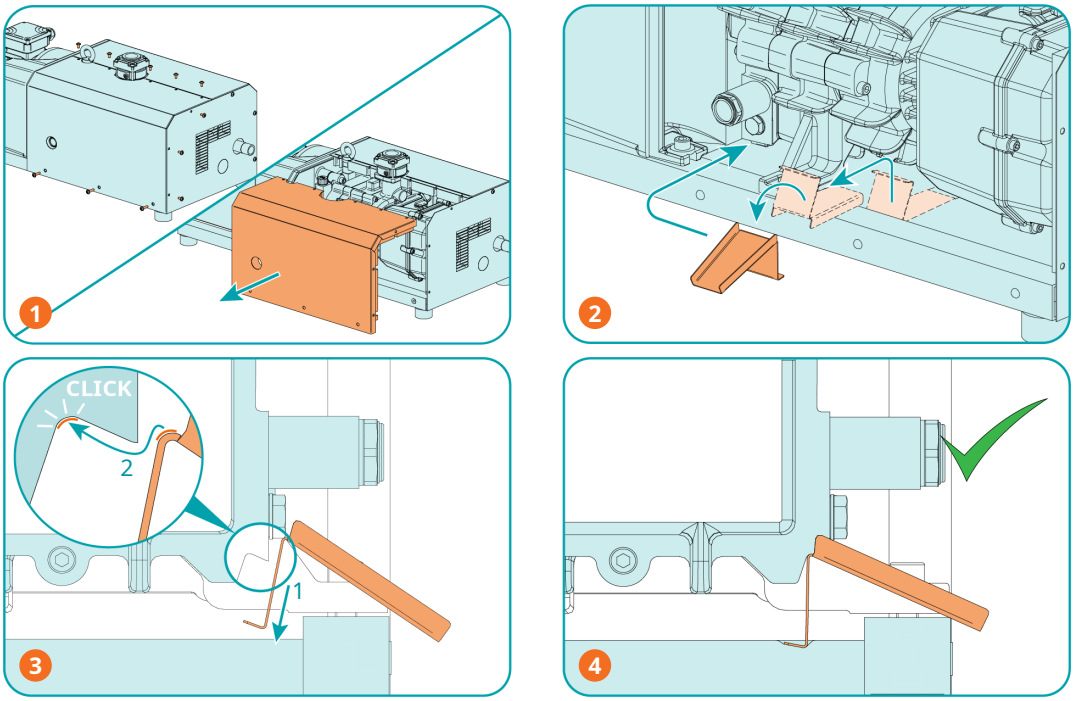

Description			
1	Remove all screws and left cover first	2	Remove the oil drain tool (ODT) from the recess in the lower insulating mat and place it below the oil drain plug (ODP).
3	1. Press the support foot of the oil drain tool (ODT) into the insulating mat. 2. Slide the tool in the direction of the arrow until the ramp clears the edge of the housing and the tool snaps into the final position.	4	Check that the oil drain tool (ODT) is securely positioned and firmly seated before opening the oil drain plug (ODP).

Standard Oil Drain Plug

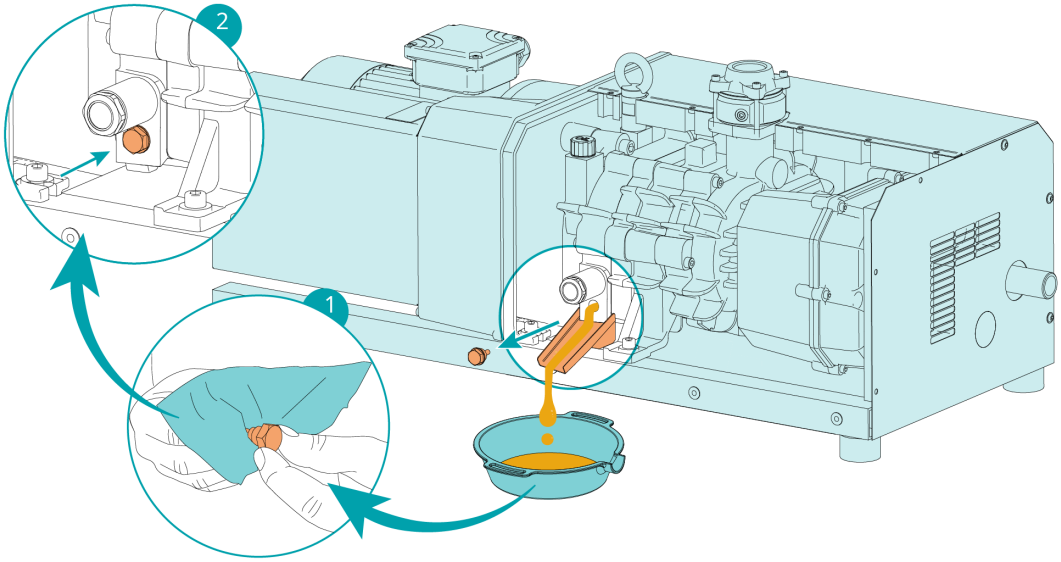

Extended Oil Drainl Plug (optional)

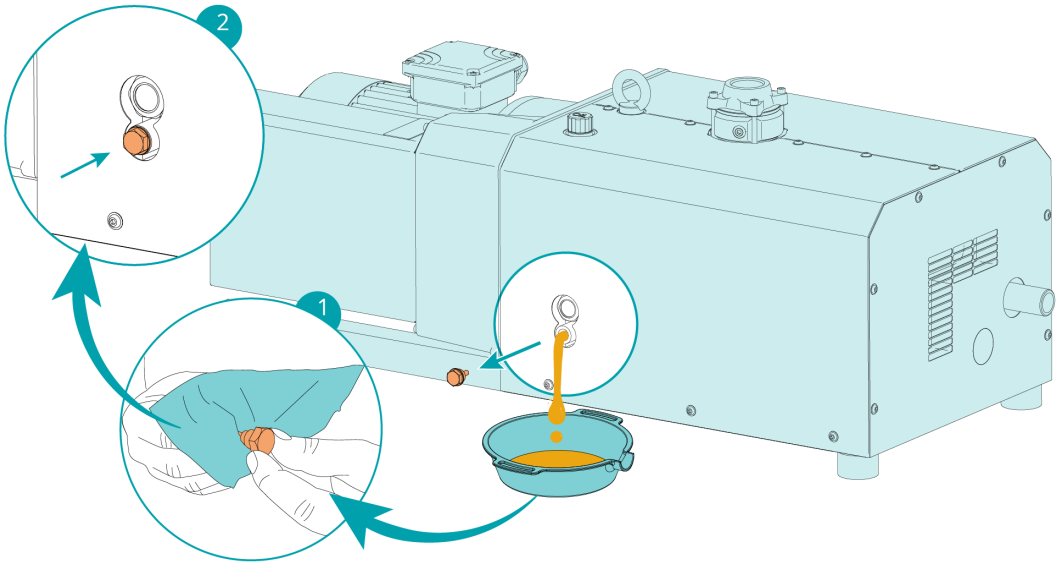

- For information on oil type and filling capacities, see the *Technical Data* [➔ 29] and *Oil* [➔ 30] chapters.

Standard Oil Fill Plug

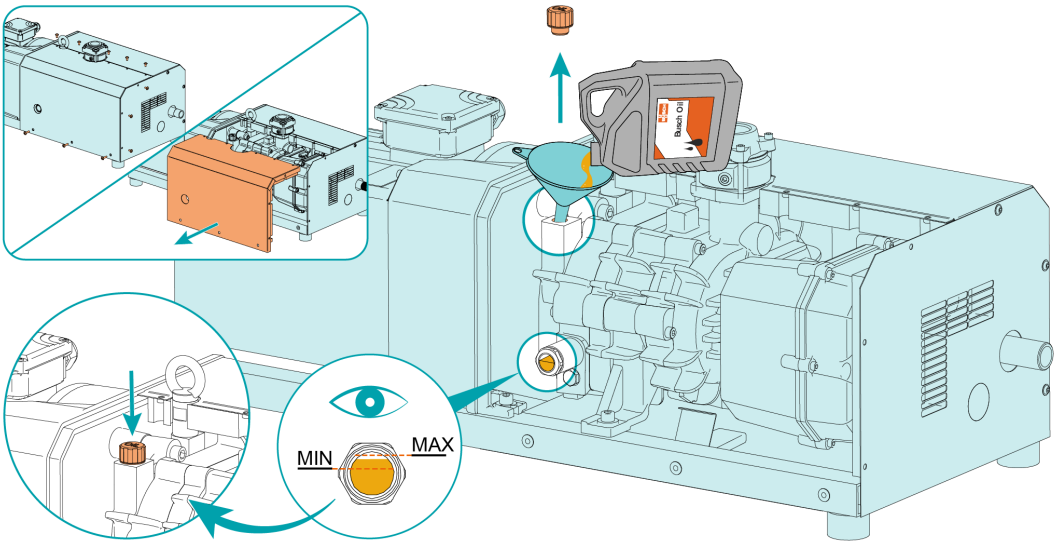

Extended Oil Fill Plug (optional)

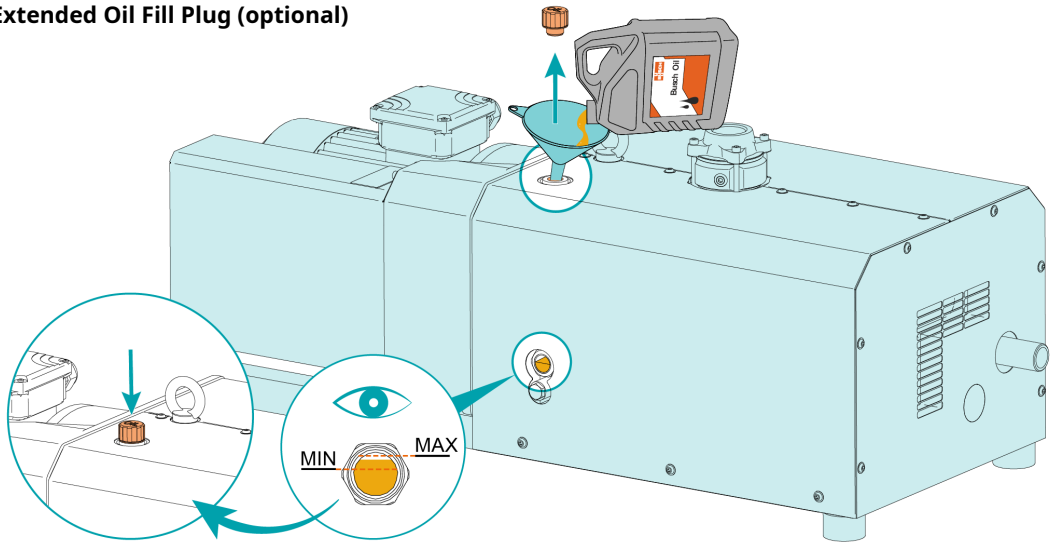

The oil level should stay constant over the lifetime of the oil. If the level does fall, this indicates a leak and the machine requires repair.

9 Overhaul

WARNING

The machine is contaminated with hazardous material.

Risk of poisoning!

Risk of infection!

If the machine is contaminated with hazardous material:

- Wear appropriate personal protective equipment.

NOTICE

Incorrect assembly.

Risk of premature failure!

Loss of efficiency!

- Any disassembly of the machine beyond that described in this manual must be carried out by technicians approved by Busch.

If the machine has conveyed gas contaminated with foreign materials which are hazardous to health:

- Decontaminate the machine as much as possible and state the contamination status in a ‘Declaration of Contamination’.

The manufacturer will only accept machine accompanied by a signed, fully completed and legally binding "declaration of contamination", downloadable from the following link: *buschvacuum.com/declaration-of-contamination*.

10 Decommissioning

DANGER

Live wires.

Risk of electrical shock!

- Electrical installation work must only be executed by qualified personnel.

CAUTION

Hot surface.

Risk of burns!

- Before doing anything that requires touching the machine, let it cool down first.

CAUTION

Hot liquids.

Risk of burns!

- Before draining liquids, let the machine cool down first.

- Stop the machine and lock it to prevent accidental start-up.
- Disconnect the power supply.
- Vent the connected lines to atmospheric pressure.
- Disconnect all connections.

If the machine is to be stored:

- See *Storage* [➔ 8].

10.1 Dismantling and Disposal

- Drain and collect the oil.
- Make sure that no oil drips onto the floor.
- Separate special waste from the machine.
- Dispose of special waste in compliance with applicable regulations.
- Dispose of the machine as scrap metal.

11 Spare Parts

NOTICE

Use of non-Busch genuine spare parts.

Risk of premature failure!

Loss of efficiency!

- Use only Busch genuine spare parts, consumables and supplies to ensure correct operation of the machine and to validate the warranty.

Spare part	Description	Article number
Service kit	Includes all parts to perform maintenance work	0992 214 852
Inlet screen (IS)		0534 000 018
Oil draining tool		0391 236 558

If other parts are required:

- Contact your Busch representative.

12 Troubleshooting

DANGER

Live wires.

Risk of electrical shock!

- Electrical installation work must only be executed by qualified personnel.

CAUTION

Hot surface.

Risk of burns!

- Before doing anything that requires touching the machine, let it cool down first.

CAUTION

Hot liquids.

Risk of burns!

- Before draining liquids, let the machine cool down first.

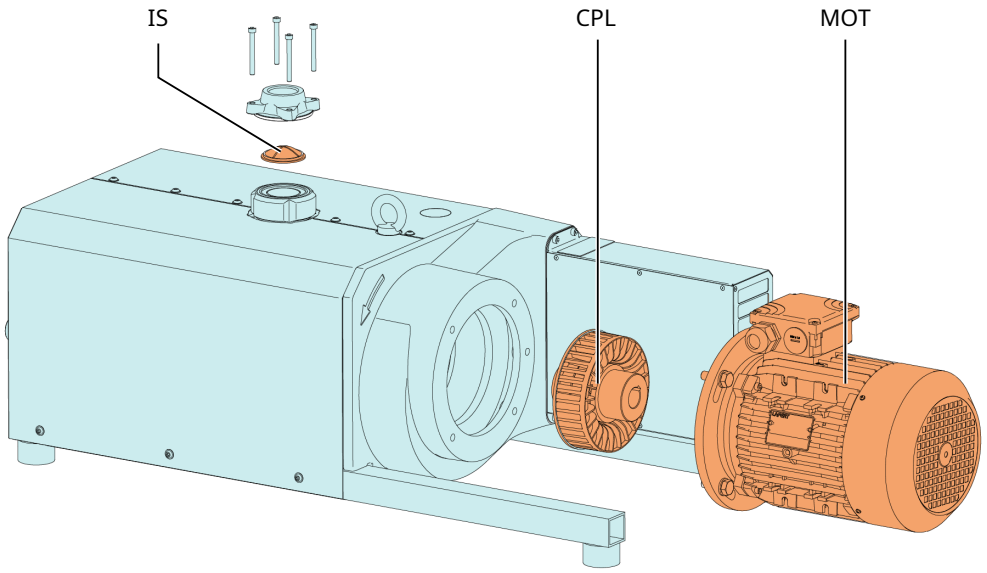

Description			
IS	Inlet screen	CPL	Coupling
MOT	Motor		

The machine does not start.	
Possible Cause	**Remedy**
The motor is not supplied with the correct voltage.	• Check the power supply.
The motor is defective.	• Replace the motor (contact Busch).
The coupling (CPL) is defective.	• Replace the coupling (CPL) (contact Busch).

The machine does not reach the usual pressure at the inlet connection.	
Possible Cause	**Remedy**
The inlet screen (IS) is partially clogged.	• Clean the inlet screen (IS).
The inlet filter cartridge (optional) is partially clogged.	• Replace the inlet filter cartridge.
The vacuum relief valve (VRE) is misadjusted or defective.	• Adjust, repair or replace, respectively.
Internal parts are worn or damaged.	• Repair the machine (contact Busch).

The machine runs very noisily.	
Possible Cause	**Remedy**
Worn coupling (CPL).	• Replace the coupling (CPL) (contact Busch)
Oil level too low.	• Check the machine for leakage. • Top up oil.
Defective bearings.	• Repair the machine (contact Busch).

The machine runs too hot.	
Possible Cause	**Remedy**
Insufficient cooling.	• Remove dust and dirt from the machine.
The cooling fan's direction of rotation is incorrect.	• Check the rotation direction of the cooling fan, if needed switch any one of the two power supply wires.
Ambient temperature is too high.	• Observe the permitted ambient temperature, see *Technical Data* [➔ 29].
Temperature of the process gases at the inlet too high.	• Observe the permitted gas inlet temperature, see *Technical Data* [➔ 29].
Oil level too low.	• Check the machine for leakage. • Top up oil.

For resolution of problems not listed in the troubleshooting table, contact your Busch representative.

13 Technical Data

		MM 0084 A	MM 0104 A
Nominal pumping speed (50 / 60 Hz)	m^3/h	62 / 75	80 / 95
	ACFM	– / 44	– / 57
Ultimate pressure	hPa (mbar) abs.	60	60
	TORR abs.	45	45
Ultimate pressure (PLASTEX version)	hPa (mbar) abs.	-	60
	TORR abs.	-	45
Nominal motor rating (50 / 60 Hz)	kW	1.5 / 1.7	2.2 / 2.4
	hp	– / 2.0	– / 3.0
Nominal motor speed (50 / 60 Hz)	min^{-1}	1500 / 1800	
	rpm	1500 / 1800	
Permitted motor speed	min^{-1}	600 ... 1800 at ≥ 60 hPa (mbar) abs.	
	rpm	600 ... 1800 at ≥ 45 TORR abs.	
Sound pressure level (ISO 3744), 1 m distance, at medium load (50 / 60 Hz)	dB(A)	66 / 70	
Ambient temperature	°C	0 ... 40 *	
	°F	32 ... 104 *	
Inlet gas temperature	°C	0 ... 40 *	
	°F	32 ... 104 *	
Ambient pressure		Atmospheric pressure	
Oil capacity	l	1.0	
	qts.	1.0	
Weight approx.	kg	155 **	155 **
	Lbs.	330 **	330 **
Weight approx. (PLASTEX version)	kg	-	145 **
	Lbs.	-	320 **

* In case of higher or lower temperatures, consult your Busch representative.

** The weight can vary depending on the order.

		MM 0142 A	MM 0182 A
Nominal pumping speed	m^3/h	110 / 135	140 / 175
(50 / 60 Hz)	ACFM	– / 79	– / 103
Ultimate pressure	hPa (mbar) abs.	40	40
	TORR abs.	30	30
Ultimate pressure (PLASTEX version)	hPa (mbar) abs.	-	100
	TORR abs.	-	75
Nominal motor rating	kW	3.0 / 3.4	3.5 / 4.8
(50 / 60 Hz)	hp	– / 4.0	– / 5.0
Nominal motor speed	min^{-1}	3000 / 3600	
(50 / 60 Hz)	rpm	3000 / 3600	
Permitted motor speed	min^{-1}	600 ... 3600 at ≥ 40 hPa (mbar) abs.	
	rpm	600 ... 3600 at ≥ 30 TORR abs.	
Sound pressure level (ISO 3744), 1 m distance, at medium load (50 / 60 Hz)	dB(A)	75 / 79	
Ambient temperature	°C	0 ... 40 *	
	°F	32 ... 104 *	
Inlet gas temperature	°C	0 ... 40 *	
	°F	32 ... 104 *	
Ambient pressure		Atmospheric pressure	
Oil capacity	l	1.0	
	qts.	1.0	
Weight approx.	kg	150 **	160 **
	Lbs.	330 **	365 **
Weight approx. (PLASTEX version)	kg	-	150 **
	Lbs.	-	330 **

* In case of higher or lower temperatures, consult your Busch representative.

** The weight can vary depending on the order.

14 Oil

Name	ISO-VG	Oil type	0.1 L packing	0.5 L packing	1 L packing	5 L packing
VS 150	150	Synthetic	-	0831 168 695	0831 164 883	0831 164 884
VSB 100	100	Synthetic	-	-	0831 168 351	0831 168 352

In case of unfavorable ambient temperature, other oil viscosities can be used.

- For more information, contact your Busch representative.

To find out which oil needs to be filled into the machine, refer to the name plate (NP).

Oil suitability

- **Oil VS 150**: Suitable for standard applications.
- **Oil VSB 100**: Suitable for food applications (H1)
  - Compliant with kosher and halal standards.

15 EU Declaration of Conformity

This Declaration of Conformity and the CE-markings affixed to the name plate are valid for the machine within the Busch scope of delivery. This Declaration of Conformity is issued under the sole responsibility of the manufacturer.

When this machine is integrated into a superordinate machinery, the manufacturer of the superordinate machinery (this can be the operating company, too) must conduct the conformity assessment process for the superordinate machine or plant, issue the Declaration of Conformity for it and affix the CE-marking.

The manufacturer is determined by the serial number:

Serial number starts with **DEM1...**

Busch Produktions GmbH
Schauinslandstr. 1
79689 Maulburg
Germany

Serial number starts with **USM1...**

Busch Manufacturing LLC
516 Viking Drive
Virginia Beach, VA 23452
USA

declares that the machine: vacuum pump MINK MM 0084 A; MINK MM 0104 A; MINK MM 0142 A; MINK MM 0182 A

fulfill(s) all the relevant provisions from EU directives or regulations:

- 'Machinery Directive' 2006/42/EC, if the serial number is less than or equal to XXX127029999 (until January 19, 2027).
- 'Machinery Regulation' (EU) 2023/1230, if the serial number is greater than or equal to XXX127030000 (from January 20, 2027). The conformity assessment has been carried out according to internal production control procedure (Module A), in accordance with the requirements of the 'Machinery Regulation'.
- 'Electromagnetic Compatibility' (EMC) 2014/30/EU
- 'RoHS' 2011/65/EU Restriction of the use of certain hazardous substances in electrical and electronic equipment (incl. all related applicable amendments)
- 'Cyber Resilience Act' [1], Regulation (EU) 2024/2847, if the serial number is greater than or equal to XXX127480000 (from December 11, 2027). The conformity assessment has been carried out according to internal production control procedure (Module A), in accordance with the requirements of the 'Cyber Resilience Act'.

and comply(-ies) with the following harmonized standards, common specifications or other technical specifications:

Standard	Title of the Standard
EN ISO 12100 : 2010	Safety of machinery - Basic concepts, general principles of design
EN 1012-2 : 1996 + A1 : 2009	Vacuum pumps - Safety requirements - Part 2
EN 60204-1 : 2018	Safety of machinery - Electrical equipment of machines - Part 1: General requirements
EN ISO 13857 : 2019	Safety of machinery - Safety distances to prevent hazard zones being reached by the upper and lower limbs
EN ISO 3744 : 2010	Acoustics - Determination of sound power levels and sound energy levels of noise sources using sound pressure - Engineering methods for an essentially free field over a reflecting plane
EN IEC 63000 : 2018	Technical documentation for the assessment of electrical and electronic products with respect to the restriction of hazardous substances
EN IEC 61000-6-2 : 2019	Electromagnetic compatibility (EMC) - Generic standards. Immunity for industrial environments
EN IEC 61000-6-4 : 2019	Electromagnetic compatibility (EMC) - Generic standards. Emission standard for industrial environments
EN IEC 62443-3-3 : 2019	Industrial communication networks - Network and system security - Part 3-3: System security requirements and security levels

Legal person authorized to compile the technical file and authorized representative in the EU (if the manufacturer is not located in the EU):
Busch Dienste GmbH, Schauinslandstr. 1, DE-79689 Maulburg

Maulburg, 2026.06.17

Dr. Martin Gutmann
General Manager
Busch Produktions GmbH

Virginia Beach, 2026.06.17

Dalip Kapoor
Chief Counsel, Legal & Compliance Officer
Busch Manufacturing LLC

[1] The **'Cyber Resilience Act'** regulation is applicable if the machine is delivered ex-factory with digital elements containing programmable or digital functions, such as a control box, a VSD (Variable Speed Drive), an OTTO IoT Box, a Busch PLC (Programmable Logic Controller) ...

16 UK Declaration of Conformity

This Declaration of Conformity and the UKCA-markings affixed to the name plate are valid for the machine within the Busch scope of delivery. This Declaration of Conformity is issued under the sole responsibility of the manufacturer.

When this machine is integrated into a superordinate machinery, the manufacturer of the superordinate machinery (this can be the operating company, too) must conduct the conformity assessment process for the superordinate machine or plant, issue the Declaration of Conformity for it and affix the UKCA-marking.

The manufacturer is determined by the serial number:

Serial number starts with **DEM1...**

Busch Produktions GmbH
Schauinslandstr. 1
79689 Maulburg
Germany

Serial number starts with **USM1...**

Busch Manufacturing LLC
516 Viking Drive
Virginia Beach, VA 23452
USA

declares that the machine: vacuum pump MINK MM 0084 A; MINK MM 0104 A; MINK MM 0142 A; MINK MM 0182 A

fulfill(s) all the relevant provisions from UK legislations:

- Supply of Machinery (Safety) Regulations 2008
- Electromagnetic Compatibility Regulations 2016
- Restriction of the use of certain hazardous substances in Electrical and Electronic Equipment Regulations 2012

and comply(-ies) with the following designated standards, common specifications or other technical specifications:

Standard	Title of the Standard
EN ISO 12100 : 2010	Safety of machinery - Basic concepts, general principles of design
EN 1012-2 : 1996 + A1 : 2009	Vacuum pumps - Safety requirements - Part 2
EN 60204-1 : 2018	Safety of machinery - Electrical equipment of machines - Part 1: General requirements
EN ISO 13857 : 2019	Safety of machinery - Safety distances to prevent hazard zones being reached by the upper and lower limbs
EN ISO 3744 : 2010	Acoustics - Determination of sound power levels and sound energy levels of noise sources using sound pressure - Engineering methods for an essentially free field over a reflecting plane
EN IEC 63000 : 2018	Technical documentation for the assessment of electrical and electronic products with respect to the restriction of hazardous substances
EN IEC 61000-6-2 : 2019	Electromagnetic compatibility (EMC) - Generic standards. Immunity for industrial environments
EN IEC 61000-6-4 : 2019	Electromagnetic compatibility (EMC) - Generic standards. Emission standard for industrial environments
EN IEC 62443-3-3 : 2019	Industrial communication networks - Network and system security - Part 3-3: System security requirements and security levels

Legal person authorized to compile the technical file and importer in the UK (if the manufacturer is not located in the UK):
Busch (UK) Ltd, 30 Hortonwood, Telford – UK

Maulburg, 2026.06.17

Dr. Martin Gutmann
General Manager
Busch Produktions GmbH

Virginia Beach, 2026.06.17

Dalip Kapoor
Chief Counsel, Legal & Compliance Officer
Busch Manufacturing LLC

Notes

BUSCH GROUP

The Busch Group is one of the world's largest manufacturers of vacuum pumps, vacuum systems, blowers, compressors and gas abatement systems. Under its umbrella, the group houses two well-known brands: Busch Vacuum Solutions and Pfeiffer Vacuum+Fab Solutions. Together, they offer solutions to a wide range of industries. A global network of highly competent local teams in 44 countries ensures that expert, tailor-made support is always available near you. Wherever you are. Whatever your business.

- Busch Group companies
- Busch Group production sites
- Busch Group service centers
- Busch Group local representatives

www.buschvacuum.com

www.pfeiffer-vacuum.com

0870231667 | C0_en-US