VACUUM SOLUTIONS

Part of the BUSCH GROUP

SECO

Dry-running Rotary Vane Vacuum Pumps
SV 1008 C

Instruction Manual

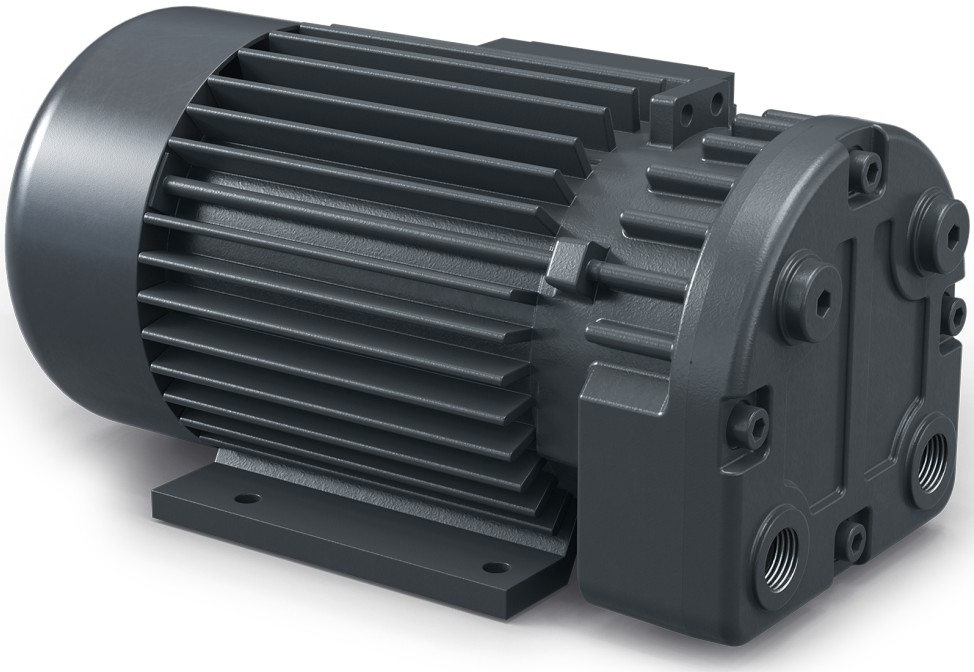

SERVICE AND SPARE PARTS, INSTRUCTION MANUALS ... WWW.BUSCHVACUUM.COM/SERVICE-CONTACT

VACUUM APP

0870135648 | B0_en-US | Original instructions

2026/09/17

Table of Contents

1 Safety ... 3

2 Product Description ... 4

2.1 Operating Principle ... 5

2.2 Intended Use ... 5

2.3 Standard Features ... 6

2.3.1 Motor Thermal Protection ... 6

2.4 Optional Accessories ... 6

2.4.1 Inlet Filter ... 6

2.4.2 Hose Nipple ... 6

2.4.3 Vacuum Regulating Unit ... 6

2.4.4 Silencer ... 6

2.4.5 Handle ... 6

2.4.6 Accessories Description ... 7

3 Transport ... 8

4 Storage ... 8

5 Installation ... 9

5.1 Installation Conditions ... 9

5.2 Connecting Lines / Pipes ... 10

5.2.1 Suction Connection ... 10

5.2.2 Discharge Connection ... 10

6 Electrical Connection ... 11

6.1 Machine delivered without Control Box or Variable Speed Drive (VSD) ... 12

6.2 Wiring Diagram Three-Phase Motor ... 12

6.3 Wiring Diagram Single-Phase Motor ... 13

7 Commissioning ... 14

8 Maintenance ... 15

8.1 Maintenance Schedule ... 16

8.2 Change Vanes and Internal Filters ... 16

9 Overhaul ... 18

10 Decommissioning ... 19

10.1 Dismantling and Disposal ... 19

11 Spare Parts ... 19

12 Troubleshooting ... 20

13 Technical Data ... 21

14 EU Declaration of Conformity ... 22

15 UK Declaration of Conformity ... 23

1 Safety

Prior to handling the machine, this instruction manual should be read and understood. If anything needs to be clarified, please contact your Busch representative.

Read this manual carefully before use and keep for future reference.

This instruction manual remains valid as long as the customer does not change anything on the product.

The machine is intended for industrial use. It must be handled only by technically trained personnel.

Always wear appropriate personal protective equipment in accordance with the local regulations.

The machine has been designed and manufactured in accordance with the state-of-the-art methods. Nevertheless, residual risks may remain, as described in the following chapters and in accordance with the chapter *Intended Use* [➔ 5].

This instruction manual highlights potential hazards where appropriate. Safety notes and warning messages are tagged with one of the keywords DANGER, WARNING, CAUTION, NOTICE and NOTE as follows:

DANGER

... indicates an imminent dangerous situation that will result in death or serious injuries if not prevented.

WARNING

... indicates a potentially dangerous situation that could result in death or serious injuries.

CAUTION

... indicates a potentially dangerous situation that could result in minor injuries.

NOTICE

... indicates a potentially dangerous situation that could result in damage to property.

NOTE

... indicates helpful tips and recommendations, as well as information for efficient and trouble-free operation.

2 Product Description

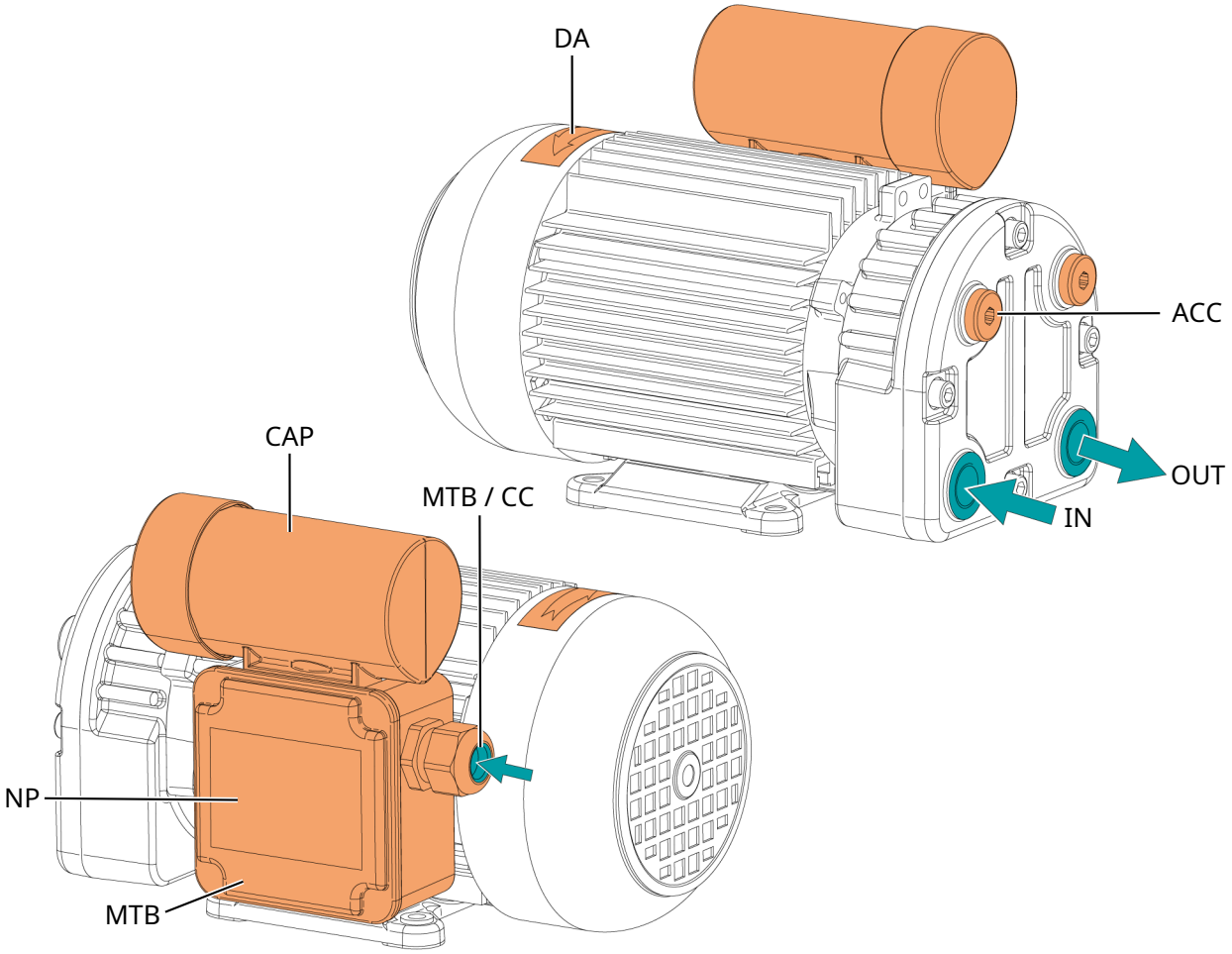

Description			
IN	Suction connection	OUT	Discharge connection
ACC	Accessory connection (vacuum)	CAP	Capacitor
DA	Directional arrow	MTB	Motor terminal box
MTB / CC	Motor terminal box cable connection	NP	Nameplate

NOTE

Technical term.

In this instruction manual, we consider that the term 'machine' refers to the 'vacuum pump'.

NOTE

Illustrations.

In this instruction manual, the illustrations may differ from the appearance of the machine.

2.1 Operating Principle

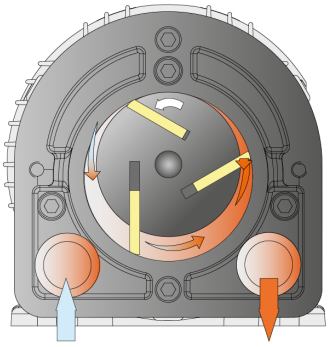

The machine works on the rotary vane principle.

The compression is made without the use of any lubrication.

NOTICE

Lubricating a dry running machine (compression chamber).

Risk of damage to the machine!

- Do not lubricate the compression chamber of the machine with oil or grease.

2.2 Intended Use

WARNING

In case of foreseeable misuse outside the intended use of the machine.

Risk of injuries!

Risk of damage to the machine!

Risk of damage to the environment!

- Make sure to follow all instructions described in this manual.

The machine is intended for the suction of air and other dry, non-aggressive, non-toxic, non-ignitable and non-explosive gases.

Conveying of other media leads to an increased thermal and/or mechanical load on the machine and is permissible only after a consultation with Busch.

The machine is intended for the placement in a non-potentially explosive environment.

The machine is capable of maintaining ultimate pressure, see *Technical Data* [➔ 21].

The machine is suitable for continuous operation.

Permitted environmental conditions, see *Technical Data* [➔ 21].

2.3 Standard Features

2.3.1 Motor Thermal Protection

Single-phase motors are equipped with a thermal protection switch to protect the machine against overload. Three-phase motors are not equipped with a thermal protection switch.

2.4 Optional Accessories

2.4.1 Inlet Filter

The inlet filter (IF) protects the machine against dust and other solids in the process gas. The inlet filter is available with a cartridge.

2.4.2 Hose Nipple

A hose nipple could be fitted to the inlet line. It allows an easy connection to the machine with a flexible hose.

2.4.3 Vacuum Regulating Unit

The vacuum regulating valve (VRV) controls inlet pressure when the machine is used on vacuum duties. A vacuum gauge is also included.

2.4.4 Silencer

The silencer (SI) can be fitted after the hose nipple at the inlet (IN) or outlet (OUT). It reduces the gas noise for vacuum and pressure operation.

2.4.5 Handle

A handle (HD) can be fitted at the top of the machine for mobile operation.

2.4.6 Accessories Description

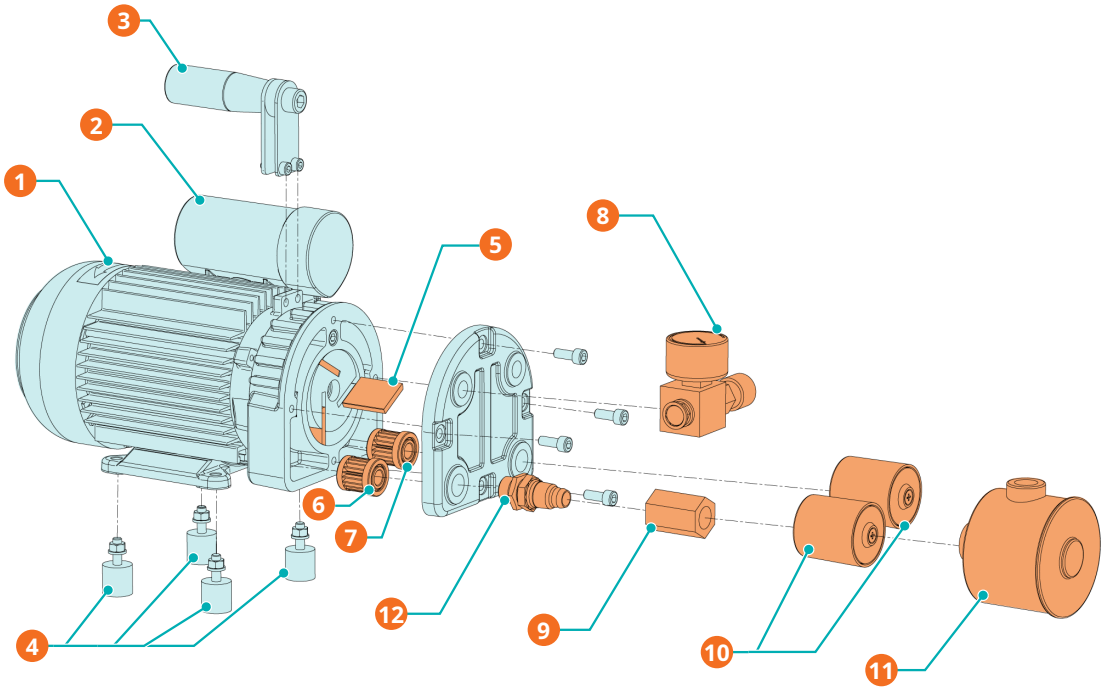

Description			
1	Direction arrow (DA)	2	Capacitor (CAP)
3	Handle (HD) (optional)	4	Feets with rubber pads (FRP)
5	Vanes (VA) (x 3)	6	Internal inlet filter (IIF)
7	Internal discharge filter (IDF)	8	Vacuum regulation unit (vacuum regulating valve (VRV) with vacuum gauge (VG)) (optional)
9	Non-return valve (NRV) (optional)	10	Silencer (SI) (optional)
11	Inlet filter (IF) (optional)	12	Hose nipple (optional)

3 Transport

- To find out the weight of the machine, refer to the chapter *Technical Data* [➔ 21] or the nameplate (NP).

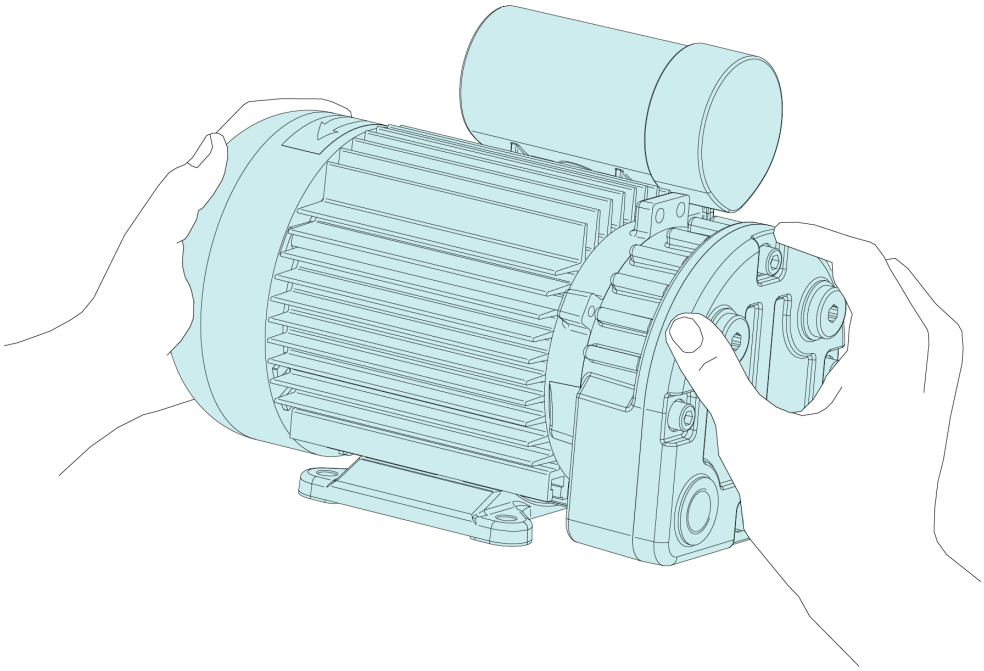

- Check the machine for transport damage.

If the machine is secured to a base plate:

- Remove the machine from the base plate.

4 Storage

- Seal hermetically all apertures with the caps provided with the machine, or with adhesive tape if the caps are no longer available.
- Store the machine indoors, in a dry place, away from dust and vibrations and if possible, in original packaging, preferably at temperatures between -10 ...40°C.

If the machine is to be stored for more than 3 months:

- Seal hermetically all apertures with the caps provided with the machine, or with adhesive tape if the caps are no longer available.
- Wrap the machine in a corrosion inhibitor film.
- Store the machine indoors, in a dry place, away from dust and vibrations and if possible, in original packaging, preferably at temperatures between -10 ...40°C.

5 Installation

5.1 Installation Conditions

NOTICE

Use of the machine outside of the permitted installation conditions.

Risk of premature failure!

Loss of efficiency!

- Make sure that the installation conditions are fully respected.

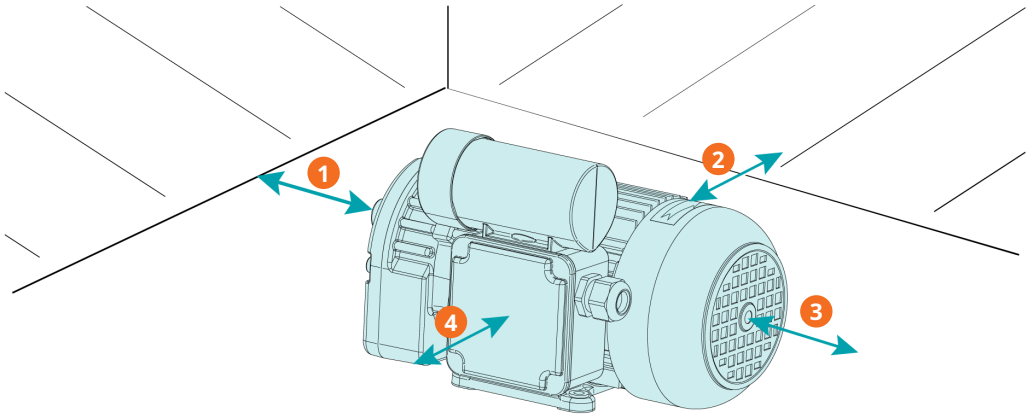

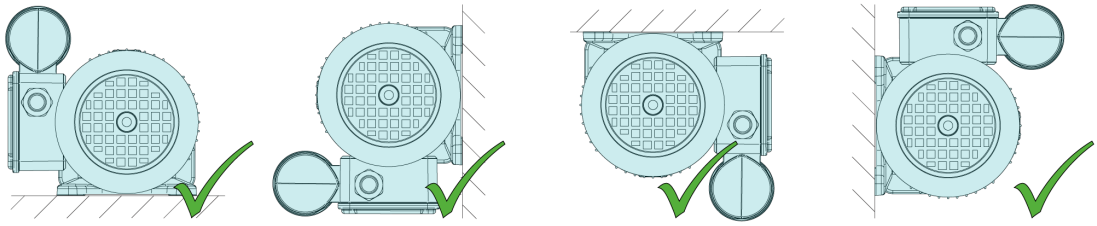

Description			
1	~ 2 cm	2	~ 2 cm
3	~ 2 cm	4	~ 2 cm

- Make sure that the environment of the machine is not potentially explosive.
- Make sure that the ambient conditions comply with the *Technical Data* [➔ 21].
- Make sure that the environmental conditions comply with the protection class of the motor and the electrical elements.
- Make sure that the installation space or location is protected from weather and lightning.
- Make sure that the installation space or location is vented such that sufficient cooling of the machine is provided.
- Make sure that cooling air inlets and outlets are not covered or obstructed and that the cooling air flow is not affected adversely in any other way.
- Make sure that enough space remains for maintenance work.
- Make sure that the machine is placed or mounted horizontally, a maximum deviation of 1° in any direction is acceptable.
- Make sure that all provided covers, guards, hoods, etc. are mounted.

If the machine is installed at an altitude greater than 1000 meters above sea level:

- Contact your Busch representative, the motor should be derated or the ambient temperature limited.

5.2 Connecting Lines / Pipes

- Remove all protective covers before installation.
- Make sure that the connection lines cause no stress on the connections of the machine. Therefore, we recommend installing flexible lines on the suction and discharge connections.
- Make sure that the diameter of the connection lines over the entire length is at least as large as the connections of the machine.

In case of long connection lines, it is recommended to use larger diameters to avoid a loss of efficiency. In this case, please contact your Busch representative.

5.2.1 Suction Connection

NOTICE

Ingress of foreign objects or liquids.

Risk of damage to the machine !

If the inlet gas contains dust or other foreign solid particles:

- Install a suitable filter (5 micron or less) upstream from the machine.

Connection size(s):

– G3/8”

Depending on the specific configuration ordered, other connection dimensions may apply.

- Make sure that the connection lines cause no stress on the connections of the machine. Therefore, we recommend installing flexible lines on the suction and discharge connections.

5.2.2 Discharge Connection

NOTICE

Discharge gas flow obstructed.

Risk of damage to the machine!

- Make sure that the discharged gas will flow without obstruction. Do not shut off or throttle the discharge line or use it as a pressurized air source.

Connection size(s):

– G3/8”

Depending on the specific configuration ordered, other connection dimensions may apply.

- Make sure that the connection lines cause no stress on the connections of the machine. Therefore, we recommend installing flexible lines on the suction and discharge connections.

6 Electrical Connection

DANGER

Live wires.

Risk of electrical shock!

- Electrical installation work must only be executed by qualified personnel.

CURRENT PROTECTION OF THE CUSTOMER INSTALLATION:

DANGER

Missing current protection.

Risk of electrical shock!

- Current protection in accordance with EN 60204-1 must be provided by the customers on their installation(s).
- The electrical installation must comply with the applicable national and international standards.

NOTICE

Electromagnetic compatibility.

- Make sure that the motor of the machine will not be affected by electric or electromagnetic disturbance from the mains, if necessary, seek advice from Busch.
- Make sure that the EMC of the machine is compliant with the requirements of your supply network system, if necessary, provide further interference suppression (EMC of the machine, see *EU Declaration of Conformity* [➔ 22] or *UK Declaration of Conformity* [➔ 23]).

6.1 Machine delivered without Control Box or Variable Speed Drive (VSD)

DANGER

Live wires.

Risk of electrical shock!

- Electrical installation work must only be executed by qualified personnel.

- Make sure that the power supply for the motor is compatible with the data on the nameplate of the motor.
- If the machine is equipped with a power connector, install a residual current protective device to protect persons in case of a defective insulation.
  - Busch recommends installing a type B residual protective device suitable for the electrical installation.
- Provide a lockable disconnect switch or an emergency stop switch on the power line so that the machine is completely secured in case of an emergency situation.
- Provide a lockable disconnect switch on the power line so that the machine is completely secured during maintenance tasks.
- Provide an overload protection according to EN 60204-1 for the motor.
- Connect the protective earth conductor.
- Electrically connect the motor.

NOTICE

Incorrect connection.

Risk of damage to the motor!

- The wiring diagrams given below are typical. Check the inside of the terminal box for motor connection instructions/diagrams.

6.2 Wiring Diagram Three-Phase Motor

NOTICE

Incorrect direction of rotation.

Risk of damage to the machine!

- Operation in the wrong direction of rotation can destroy the machine in a short time! Prior to start-up, ensure that the machine is operated in the right direction.

- Determine the intended direction of rotation with the arrow (stuck on or cast).
- Jog the motor briefly.
- Watch the fan wheel of the motor and determine the direction of rotation just before the fan wheel stops.

If the rotation of the motor must be changed:

- Switch any two of the motor phase wires.

Delta connection (low voltage):

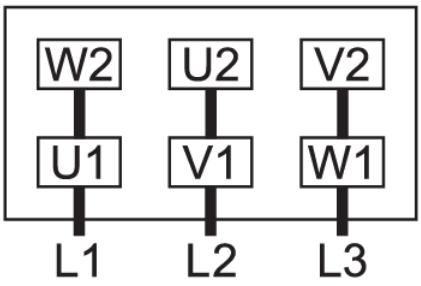

Star connection (high voltage):

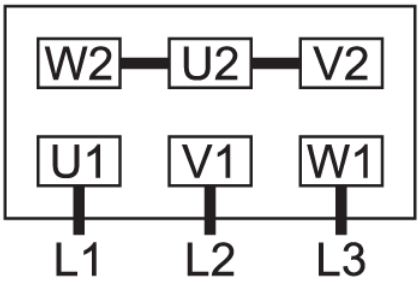

6.3 Wiring Diagram Single-Phase Motor

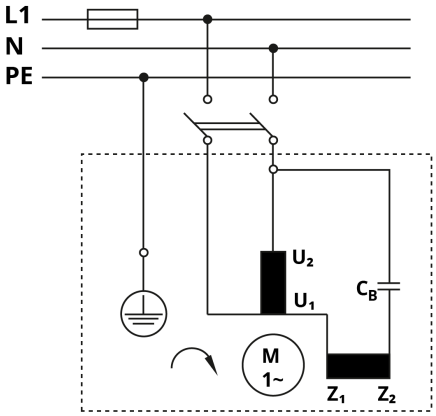

L1 = Phase 1; N = Neutral; PE = Ground
C_B = Capacitor
$M_{1\sim}$ = Standard single-phase motor
U_1 – U_2 = Main phases
Z_1 – Z_2 = Auxiliary phases

7 Commissioning

NOTICE

Lubricating a dry running machine (compression chamber).

Risk of damage to the machine!

- Do not lubricate the compression chamber of the machine with oil or grease.

CAUTION

During operation the surface of the machine may reach temperatures of more than 70°C.

Risk of burns!

- Avoid contact with the machine during and directly after operation.

CAUTION

Noise of running machine.

Risk of damage to hearing!

If persons are present in the vicinity of a non noise insulated machine over extended periods:

- Make sure to wear hearing protection.

- Make sure that the *Installation Conditions* [➔ 9] are met.
- Start the machine.
- Make sure that the maximum permissible number of starts does not exceed 12 starts per hour. Those starts should be spread within the hour.
- Make sure that the operating conditions comply with the *Technical Data* [➔ 21].

As soon as the machine is operated under normal operating conditions:

- Measure the motor current and record it as reference for future maintenance and trouble-shooting work.

8 Maintenance

DANGER

Live wires.

Risk of electrical shock!

- Electrical installation work must only be executed by qualified personnel.

WARNING

The machine is contaminated with hazardous material.

Risk of poisoning!

Risk of infection!

If the machine is contaminated with hazardous material:

- Wear appropriate personal protective equipment.

CAUTION

Hot surface.

Risk of burns!

- Before doing anything that requires touching the machine, let it cool down first.

CAUTION

Failing to properly maintain the machine.

Risk of injuries!

Risk of premature failure and loss of efficiency!

- Maintenance work must only be executed by qualified personnel.
- Respect the maintenance intervals or ask your Busch representative for service.

NOTICE

Using inappropriate cleaners.

Risk of removing safety stickers and protective paint!

- Do not use incompatible solvents to clean the machine.

- Shut down the machine and lock against inadvertent start up.
- Vent the connected lines to atmospheric pressure.

If necessary:

  - Disconnect all connections.

8.1 Maintenance Schedule

The maintenance intervals depend very much on the individual operating conditions. The intervals given below are considered as starting values which should be individually shortened or extended as appropriate.

Particularly harsh applications or heavy duty operation, such as high dust loads in the environment or in the process gas, other contamination or ingress of process material, can make it necessary to shorten the maintenance intervals significantly.

Interval	Maintenance work
Monthly	• Clean the machine from dust and dirt. In case of an inlet filter being installed: • Check the inlet filter cartridge, replace if necessary.
Every 2000 hours	• Check the vanes (VA) and change them if necessary. • Change the small internal filters (IIF & IDF).

8.2 Change Vanes and Internal Filters

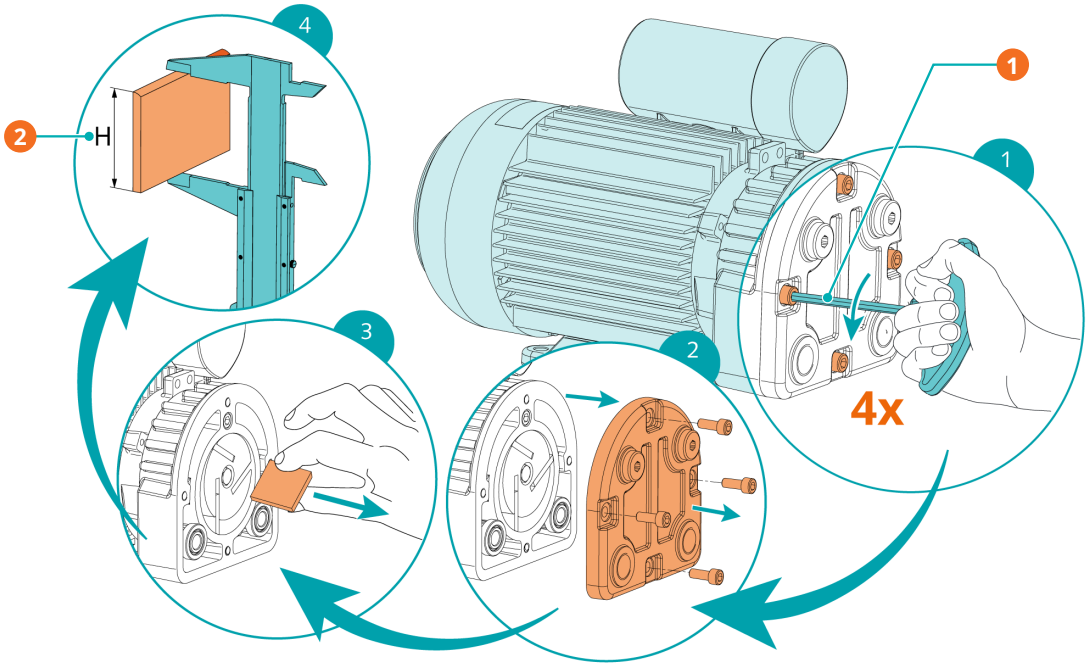

Description			
1	4 mm hex key	2	H ≥ 23 mm: OK / H < 23 mm: not OK

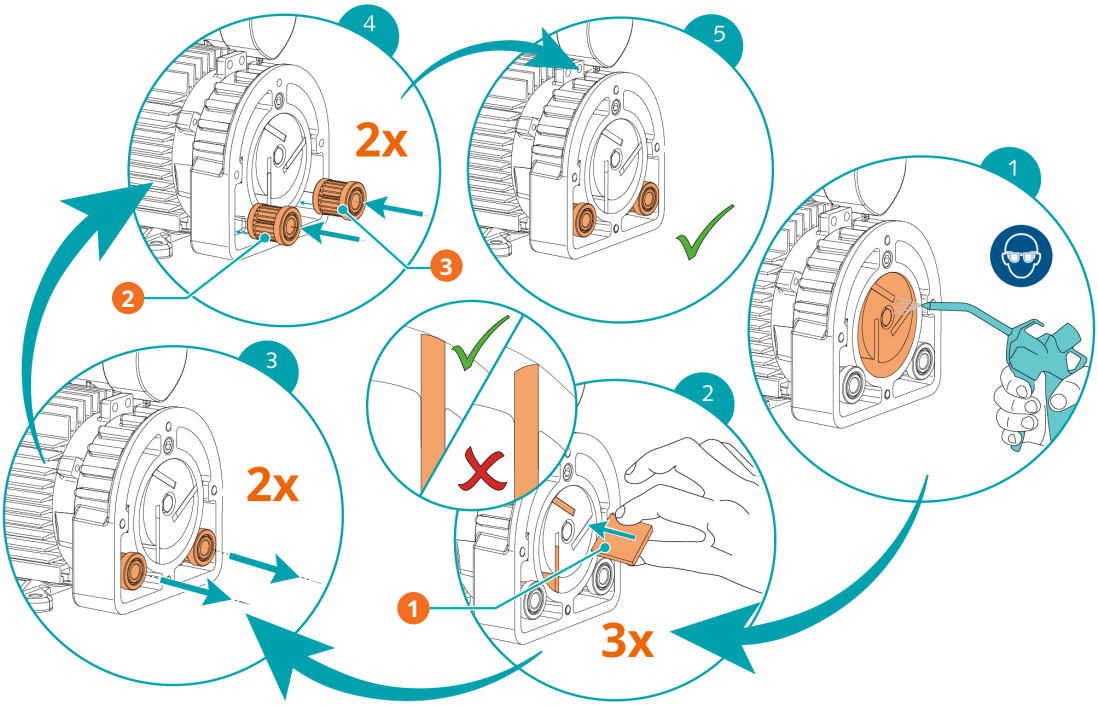

Description			
1	Busch genuine spare parts: 3 x vanes (VA): 0722133118	2	1 x Inlet filter cartridge (IIF) : 0532133447
3	1 x Discharge filter cartridge (IDF) : 0532133447		

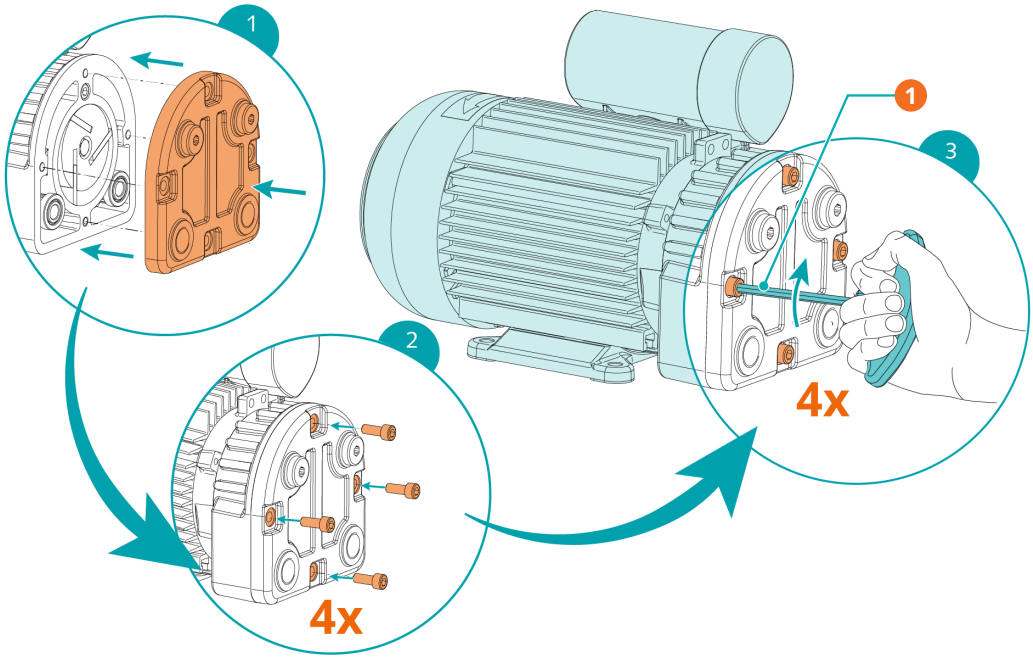

Description			
1	4 mm hex key		

9 Overhaul

WARNING

The machine is contaminated with hazardous material.

Risk of poisoning!

Risk of infection!

If the machine is contaminated with hazardous material:

- Wear appropriate personal protective equipment.

NOTICE

Improper assembly.

Risk of premature failure!

Loss of efficiency!

- Any dismantling of the machine that goes beyond anything that is described in this manual should be done by Busch authorized technicians.

If the machine has conveyed gas contaminated with foreign materials which are hazardous to health:

- Decontaminate the machine as much as possible and state the contamination status in a ‘Declaration of Contamination’.

Busch will only accept machine accompanied by a signed, fully completed and legally binding "declaration of contamination", downloadable from the following link: *buschvacuum.com/declaration-of-contamination*.

10 Decommissioning

DANGER

Live wires.

Risk of electrical shock!

- Electrical installation work must only be executed by qualified personnel.

CAUTION

Hot surface.

Risk of burns!

- Before doing anything that requires touching the machine, let it cool down first.

- Shut down the machine and lock against inadvertent start up.
- Disconnect the power supply.
- Vent the connected lines to atmospheric pressure.
- Disconnect all connections.

If the machine is to be stored:

- See *Storage* [➔ 8].

10.1 Dismantling and Disposal

- Separate special waste from the machine.
- Dispose of special waste in compliance with applicable regulations.
- Dispose of the machine as scrap metal.

11 Spare Parts

NOTICE

Use of non-Busch original spare parts.

Risk of premature failure!

Loss of efficiency!

- Use only original Busch spare parts, consumables and supplies to ensure correct operation of the machine and to validate the warranty.

If other parts are required:

- Contact your Busch representative.

12 Troubleshooting

DANGER

Live wires.

Risk of electrical shock!

- Electrical installation work must only be executed by qualified personnel.

CAUTION

Hot surface.

Risk of burns!

- Before doing anything that requires touching the machine, let it cool down first.

Problem	Possible Cause	Remedy
The machine does not start.	The motor is not supplied with the correct voltage.	• Check the power supply.
	The motor is defective.	• Repair the machine (contact Busch).
The machine does not reach the usual pressure.	The internal filters (IIF & IDF) are partially clogged.	• Replace the internal filters (IIF & IDF).
	The inlet filter cartridge (optional) is partially clogged.	• Replace the inlet filter cartridge.
	The regulating valves (VRV) are jammed in an open position.	• Dismantle, clean, check and reassemble the regulating valves (contact Busch).
	Stuck vanes.	• Free the vanes or replace them.
	The vanes (VA) are worn.	• Replace the vanes.
	Leakage in the line to the recipient.	• Check the connections and (if installed) the flexible tube.
The machine runs very noisily.	The machine runs in the wrong direction	• Check the direction of rotation.
	Defective bearings.	• Repair the machine (contact Busch).
The machine runs too hot.	Insufficient cooling.	• Remove dust and dirt from the machine.
	Ambient temperature too high.	• Observe the permitted ambient temperature.
	The inlet filter (IF) (optional) is partially clogged.	• Replace the filter cartridge.
	The internal filters (IIF & IDF) are partially clogged.	• Replace the internal filters (IIF & IDF).

For resolution of problems not listed in the troubleshooting table, please contact your Busch representative.

13 Technical Data

		SV 1008 C
Nominal pumping speed (50 Hz) / (60 Hz)	m^3/h	7.3 / 8.8
Ultimate pressure	hPa (mbar)	150
Nominal motor rating (50 Hz) / (60 Hz)	kW	0.25 / 0.30
Nominal motor speed (50 Hz) / (60 Hz)	min^{-1}	3000 / 3600
Sound pressure level (ISO 2151), KpA = 3 dB	dB(A)	61 / 62
Ambient temperature range	°C	-10 ...40°C
Ambient pressure		Atmospheric pressure
Weight approx.	kg	8.5

14 EU Declaration of Conformity

This Declaration of Conformity and the CE-markings affixed to the name plate are valid for the machine within the Busch scope of delivery. This Declaration of Conformity is issued under the sole responsibility of the manufacturer.

When this machine is integrated into a superordinate machinery, the manufacturer of the superordinate machinery (this can be the operating company, too) must conduct the conformity assessment process for the superordinate machine or plant, issue the Declaration of Conformity for it and affix the CE-marking.

The manufacturer

Busch Výroba CZ s.r.o.
Svárovská 620
CZ 460 01, Liberec 11

declares that the machine: vacuum pump SECO SV 1008 C

fulfill(s) all the relevant provisions from EU directives or regulations:

- ‘Machinery Directive’ 2006/42/EC, if the serial number is less than or equal to CZM127029999 (until January 19, 2027).
- ‘Machinery Regulation’ (EU) 2023/1230, if the serial number is greater than or equal to CZM127030000 (from January 20, 2027). The conformity assessment has been carried out according to internal production control procedure (Module A), in accordance with the requirements of the ‘Machinery Regulation’.
- ‘Electromagnetic Compatibility’ (EMC) 2014/30/EU
- ‘RoHS’ 2011/65/EU Restriction of the use of certain hazardous substances in electrical and electronic equipment (incl. all related applicable amendments)

and comply(-ies) with the following harmonized standards, common specifications or other technical specifications:

Standard	Title of the Standard
EN ISO 12100 : 2010	Safety of machinery - Basic concepts, general principles of design
EN 1012-2 : 1996 + A1 : 2009	Vacuum pumps - Safety requirements - Part 2
EN 60204-1 : 2018	Safety of machinery - Electrical equipment of machines - Part 1: General requirements
EN ISO 13857 : 2019	Safety of machinery - Safety distances to prevent hazard zones being reached by the upper and lower limbs
EN ISO 2151 : 2008	Acoustics - Noise test code for compressors and vacuum pumps - Engineering method (grade 2)
EN IEC 63000 : 2018	Technical documentation for the assessment of electrical and electronic products with respect to the restriction of hazardous substances
EN IEC 61000-6-2 : 2019	Electromagnetic compatibility (EMC) - Generic standards. Immunity for industrial environments
EN IEC 61000-6-4 : 2019	Electromagnetic compatibility (EMC) - Generic standards. Emission standard for industrial environments

Legal person authorized to compile the technical file and authorized representative in the EU (if the manufacturer is not located in the EU):
Busch Dienste GmbH, Schauinslandstr. 1, DE-79689 Maulburg

Liberec, 2026.06.17

Michael Dostalek, General Manager

Busch Výroba CZ s.r.o.

15 UK Declaration of Conformity

This Declaration of Conformity and the UKCA-markings affixed to the name plate are valid for the machine within the Busch scope of delivery. This Declaration of Conformity is issued under the sole responsibility of the manufacturer.

When this machine is integrated into a superordinate machinery, the manufacturer of the superordinate machinery (this can be the operating company, too) must conduct the conformity assessment process for the superordinate machine or plant, issue the Declaration of Conformity for it and affix the UKCA-marking.

The manufacturer

Busch Výroba CZ s.r.o.
Svárovská 620
CZ 460 01, Liberec 11

declares that the machine: vacuum pump SECO SV 1008 C

fulfill(s) all the relevant provisions from UK legislations:

- Supply of Machinery (Safety) Regulations 2008
- Electromagnetic Compatibility Regulations 2016
- Restriction of the use of certain hazardous substances in Electrical and Electronic Equipment Regulations 2012

and comply(-ies) with the following designated standards, common specifications or other technical specifications:

Standard	Title of the Standard
EN ISO 12100 : 2010	Safety of machinery - Basic concepts, general principles of design
EN 1012-2 : 1996 + A1 : 2009	Vacuum pumps - Safety requirements - Part 2
EN 60204-1 : 2018	Safety of machinery - Electrical equipment of machines - Part 1: General requirements
EN ISO 13857 : 2019	Safety of machinery - Safety distances to prevent hazard zones being reached by the upper and lower limbs
EN ISO 2151 : 2008	Acoustics - Noise test code for compressors and vacuum pumps - Engineering method (grade 2)
EN IEC 63000 : 2018	Technical documentation for the assessment of electrical and electronic products with respect to the restriction of hazardous substances
EN IEC 61000-6-2 : 2019	Electromagnetic compatibility (EMC) - Generic standards. Immunity for industrial environments
EN IEC 61000-6-4 : 2019	Electromagnetic compatibility (EMC) - Generic standards. Emission standard for industrial environments

Legal person authorized to compile the technical file and importer in the UK (if the manufacturer is not located in the UK):
Busch (UK) Ltd, 30 Hortonwood, Telford – UK

Liberec, 2026.06.17

Michael Dostalek, General Manager

Busch Výroba CZ s.r.o.

BUSCH GROUP

The Busch Group is one of the world's largest manufacturers of vacuum pumps, vacuum systems, blowers, compressors and gas abatement systems. Under its umbrella, the group houses two well-known brands: Busch Vacuum Solutions and Pfeiffer Vacuum+Fab Solutions. Together, they offer solutions to a wide range of industries. A global network of highly competent local teams in 44 countries ensures that expert, tailor-made support is always available near you. Wherever you are. Whatever your business.

- Busch Group companies
- Busch Group production sites
- Busch Group service centers
- Busch Group local representatives

www.buschvacuum.com

www.pfeiffer-vacuum.com

0870135648 | B0_en-US